Page 01_INDEX
Page 02_System Block Diagram
Page 03_CPU_ Display
Page 04_CPU_ Memory
Page 05_CPU_+VCORE
Page 06_CPU_+VCCGT
Page 07_CPU_ +VCCQ/IO/SA
Page 08_CPU_ GND
Page 09_CPU_ CFG/RSVD/XTAL/THRM_IC
Page 10_PCH_SPI/LPC
Page 11_PCH_GSPI/UART/I2C/ISH
Page 12_PCH_HDA/I2S/DMIC/SDIO
Page 13_PCH_PCIE/SATA/USB
Page 14_PCH_CLK/RTC/XTAL
Page 15_PCH_ Power Management
Page 16_PCH_Power
Page 17_BIOS/EC ROM
Page 18_LPC_DEBUG
Page 19_BLANK
Page 20_LPDDR3_CHA_D1
Page 21_LPDDR3_CHA_D2
Page 22_LPDDR3 CHB-D1
Page 23_LPDDR3 CHB-D2
Page 24_LPDDR3_CA/DQ Voltage
Page 25_GPU_PCIE
Page 26 GPU_Power_Memory
Page 27_GPU_GPIO
Page 28_GPU_VCORE
Page 29_GPU_VRAM
Page 30_EC_IT8987VG/BX
Page 31_EC_Keyboard/Backlight
Page 32_T_Sense_FAN_CHG_LED
Page 33_Click_Pad_Reset
Page 34_BLANK
Page 35_Display_eDP Panel
Page 36_Touch Panel
Page 37_Thunderbolt_DP
Page 38_Thunderbolt_PCIE
Page 39_Thunderbolt_Power
Page 40_Audio_Codec/Jack
Page 41_BLANK
Page 42_AUDIO_CODEC & AMP
Page 43_BLANK
Page 44_BLANK
Page 45_Finger Sensor DSP
Page 46_Finger Sensor
Page 47_BLANK
Page 48_WIFI_BT_1
Page 49_WIFI_BT_2
Page 50_M2 NGFF_ PCIe/Sata SSD
Page 51_TPM/TCM
Page 52_BLANK
Page 53_USB Camera
Page 54_TYPE C_Conn_1
Page 55_USB_Type C_CC+PD_1
Page 56_TYPE C_Conn_2
Page 57_USB_Type C_CC+PD_2
Page 58_BLANK
Page 59_USB_Type A_CARD
Page 60_PWRIN_CHARGER
Page 61_BAT CONN
Page 62_IMVP8_CPU_VCCGT
Page 63_IMVP8_CPU_VCCCORE
Page 64_IMVP8_CPU_VCCGT
Page 65_IMVP8_CPU_VCCSA
Page 66_ROP_PMIC_1
Page 67_ROP_PMIC_2
Page 68_ROP_PMIC_3
Page 69_ROP_PMIC_4
Page 70_LOAD_SWITCH_1
Page 71_LOAD_SWITCH_2
Page 72_GPU_VGACORE
Page 73_GPU 1_05V/1_35V_GFX
Page 74_LCD_Backlight
Page 75_TEST_POINT_SHIELDING

The type and specification of the components refer to the BOM

				NA	
				ECA NO	DATE
DESIGNED	LIWENSHENG87654565	Schematic1		65674354	
REVIEWED	LISI XXXXX			1_INDEX	
		VER	PART_NUMBER	SHEET	OF 75
		A	03030001	HUAWEI TECH CO.,LTD.	

2_System Block Diagram

该文档是极速PDF编辑器生成,

The type and specification of the components refer to the BOM

				NA	
				ECA NO	DATE
DESIGNED	LIWENSHENG87654565	Schematic1		65674354	
REVIEWED	LISI XXXXX			2_System Block Diagram	
		VER	PART_NUMBER	SHEET	OF 75
		A	03030001	HUAWEI TECH CO.,LTD.	

3_CPU_ Display

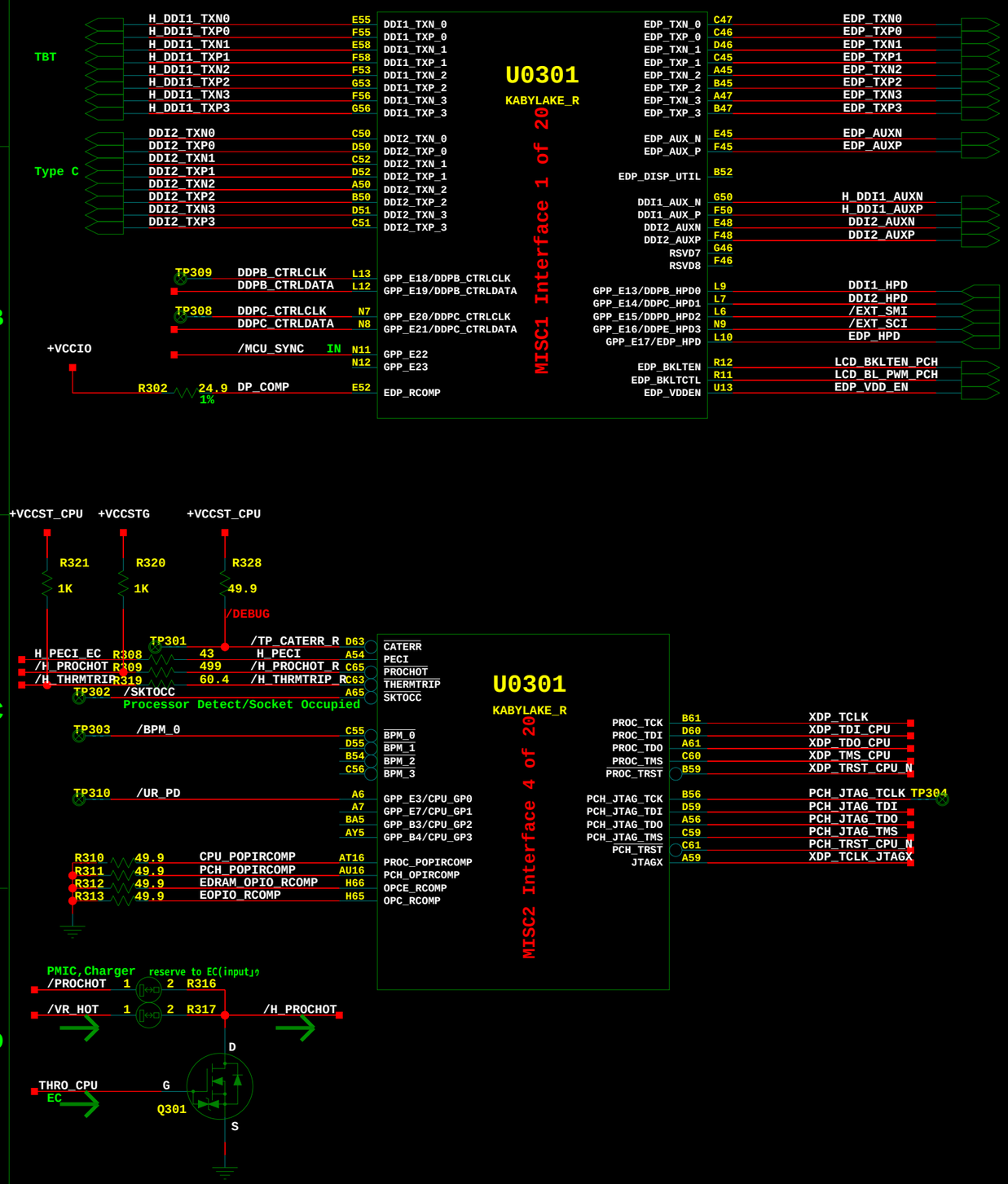

DDI Disabling and Termination Guidelines

Port	Strap	How to Enable Port	How to Disable Port
Port 1	DDPB_CTRLDATA	Pull up to 3.3V with 2.2K ohm	No Connect
Port 2	DDPC_CTRLDATA	Pull up to 3.3V with 2.2K ohm	No Connect

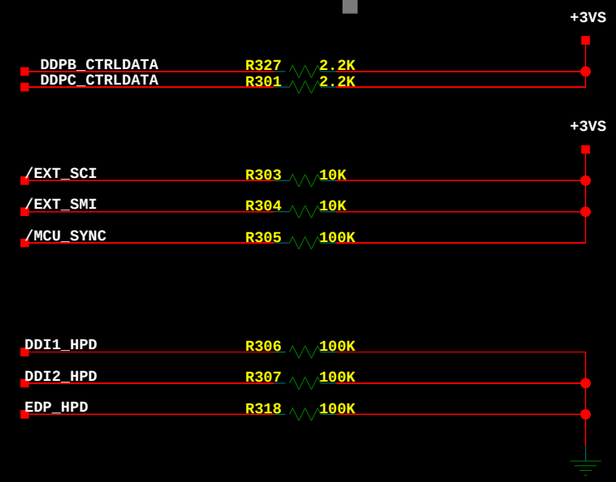

The type and specification of the components refer to the BOM

				NA	
				ECA NO	DATE
DESIGNED	LIWENSHENG87654565	Schematic1		65674354	
REVIEWED	LISI XXXXX				
		VER	PART_NUMBER	SHEET 1 OF 1	
		A	03030001	HUAWEI TECH CO.,LTD.	

4_CPU_Memory

U0301 — KABYLAKE_R — DDR1 Interface 2 of 20

Signal	Pin
M_A_D0	AL71
M_A_D1	AL68
M_A_D2	AN68
M_A_D3	AN69
M_A_D4	AL70
M_A_D5	AL69
M_A_D6	AN70
M_A_D7	AN71
M_A_D8	AR70
M_A_D9	AR68
M_A_D10	AU71
M_A_D11	AU68
M_A_D12	AR71
M_A_D13	AR69
M_A_D14	AU70
M_A_D15	AU69
M_A_D32	BB65
M_A_D33	AW65
M_A_D34	AW63
M_A_D35	AY63
M_A_D36	BA65
M_A_D37	AY65
M_A_D38	BA63
M_A_D39	BB63
M_A_D40	BA61
M_A_D41	AW61
M_A_D42	BB59
M_A_D43	AW59
M_A_D44	BB61
M_A_D45	AY61
M_A_D46	BA59
M_A_D47	AY59
M_B_D0	AY39
M_B_D1	AW39
M_B_D2	AY37
M_B_D3	AW37
M_B_D4	BB39
M_B_D5	BA39
M_B_D6	BA37
M_B_D7	BB37
M_B_D8	AY35
M_B_D9	AW35
M_B_D10	AY33
M_B_D11	AW33
M_B_D12	BB35
M_B_D13	BA35
M_B_D14	BA33
M_B_D15	BB33
M_B_D32	AY31
M_B_D33	AW31
M_B_D34	AY29
M_B_D35	AW29
M_B_D36	BB31
M_B_D37	BA31
M_B_D38	BA29
M_B_D39	BB29
M_B_D40	AY27
M_B_D41	AW27
M_B_D42	AY25
M_B_D43	AW25
M_B_D44	BB27
M_B_D45	BA27
M_B_D46	BA25
M_B_D47	BB25

Signal	Pin
DDR0_DQ_0	
DDR0_DQ_1	
DDR0_DQ_2	
DDR0_DQ_3	
DDR0_DQ_4	
DDR0_DQ_5	
DDR0_DQ_6	
DDR0_DQ_7	
DDR0_DQ_8	
DDR0_DQ_9	
DDR0_DQ_10	
DDR0_DQ_11	
DDR0_DQ_12	
DDR0_DQ_13	
DDR0_DQ_14	
DDR0_DQ_15	
DDR0_DQ_16/DDR0_DQ_32	
DDR0_DQ_17/DDR0_DQ_33	
DDR0_DQ_18/DDR0_DQ_34	
DDR0_DQ_19/DDR0_DQ_35	
DDR0_DQ_20/DDR0_DQ_36	
DDR0_DQ_21/DDR0_DQ_37	
DDR0_DQ_22/DDR0_DQ_38	
DDR0_DQ_23/DDR0_DQ_39	
DDR0_DQ_24/DDR0_DQ_40	
DDR0_DQ_25/DDR0_DQ_41	
DDR0_DQ_26/DDR0_DQ_42	
DDR0_DQ_27/DDR0_DQ_43	
DDR0_DQ_28/DDR0_DQ_44	
DDR0_DQ_29/DDR0_DQ_45	
DDR0_DQ_30/DDR0_DQ_46	
DDR0_DQ_31/DDR0_DQ_47	
DDR0_DQ_32/DDR1_DQ_0	
DDR0_DQ_33/DDR1_DQ_1	
DDR0_DQ_34/DDR1_DQ_2	
DDR0_DQ_35/DDR1_DQ_3	
DDR0_DQ_36/DDR1_DQ_4	
DDR0_DQ_37/DDR1_DQ_5	
DDR0_DQ_38/DDR1_DQ_6	
DDR0_DQ_39/DDR1_DQ_7	
DDR0_DQ_40/DDR1_DQ_8	
DDR0_DQ_41/DDR1_DQ_9	
DDR0_DQ_42/DDR1_DQ_10	
DDR0_DQ_43/DDR1_DQ_11	
DDR0_DQ_44/DDR1_DQ_12	
DDR0_DQ_45/DDR1_DQ_13	
DDR0_DQ_46/DDR1_DQ_14	
DDR0_DQ_47/DDR1_DQ_15	
DDR0_DQ_48/DDR1_DQ_32	
DDR0_DQ_49/DDR1_DQ_33	
DDR0_DQ_50/DDR1_DQ_34	
DDR0_DQ_51/DDR1_DQ_35	
DDR0_DQ_52/DDR1_DQ_36	
DDR0_DQ_53/DDR1_DQ_37	
DDR0_DQ_54/DDR1_DQ_38	
DDR0_DQ_55/DDR1_DQ_39	
DDR0_DQ_56/DDR1_DQ_40	
DDR0_DQ_57/DDR1_DQ_41	
DDR0_DQ_58/DDR1_DQ_42	
DDR0_DQ_59/DDR1_DQ_43	
DDR0_DQ_60/DDR1_DQ_44	
DDR0_DQ_61/DDR1_DQ_45	
DDR0_DQ_62/DDR1_DQ_46	
DDR0_DQ_63/DDR1_DQ_47	

Signal	Pin
DDR0_CKN_0	
DDR0_CKP_0	
DDR0_CKN_1	
DDR0_CKP_1	
DDR0_CKE_0	
DDR0_CKE_1	
DDR0_CKE_2/NC	
DDR0_CKE_3/NC	
DDR0_CS_0	
DDR0_CS_1	
DDR0_ODT_0	
NC/DDR0_ODT_1	
DDR0_CAA_0/DDR0_MA_5	
DDR0_CAA_1/DDR0_MA_9	
DDR0_CAA_2/DDR0_MA_6	
DDR0_CAA_3/DDR0_MA_8	
DDR0_CAA_4/DDR0_MA_7	
DDR0_CAA_5/DDR0_BG_0	
DDR0_CAA_6/DDR0_MA_12	
DDR0_CAA_7/DDR0_MA_11	
DDR0_CAA_8/DDR0_ACT	
DDR0_CAA_9/DDR0_BG_1	
DDR0_CAB_0/DDR0_MA_13	
DDR0_CAB_1/DDR0_MA_15	
DDR0_CAB_2/DDR0_MA_14	
DDR0_CAB_3/DDR0_MA_16	
DDR0_CAB_4/DDR0_BA_0	
DDR0_CAB_5/DDR0_MA_2	
DDR0_CAB_6/DDR0_BA_1	
DDR0_CAB_7/DDR0_MA_10	
DDR0_CAB_8/DDR0_MA_1	
DDR0_CAB_9/DDR0_MA_0	
NC/DDR0_MA_3	
NC/DDR0_MA_4	
DDR0_DQSN_0	
DDR0_DQSP_0	
DDR0_DQSN_1	
DDR0_DQSP_1	
DDR0_DQSN_2/DDR0_DQSN_4	
DDR0_DQSP_2/DDR0_DQSP_4	
DDR0_DQSN_3/DDR0_DQSN_5	
DDR0_DQSP_3/DDR0_DQSP_5	
DDR0_DQSN_4/DDR1_DQSN_0	
DDR0_DQSP_4/DDR1_DQSP_0	
DDR0_DQSN_5/DDR1_DQSN_1	
DDR0_DQSP_5/DDR1_DQSP_1	
DDR0_DQSN_6/DDR1_DQSN_4	
DDR0_DQSP_6/DDR1_DQSP_4	
DDR0_DQSN_7/DDR1_DQSN_5	
DDR0_DQSP_7/DDR1_DQSP_5	
NC/DDR0_ALERT	
NC/DDR0_PAR	
DDR_VREF_CA	
DDR0_VREF_DQ	
DDR1_VREF_DQ	
DDR_VTT_CNTL	

Signal	Pin
AU53	M_A_DIM0_CLK0_N
AT53	M_A_DIM0_CLK0_P
AU55	M_A_DIM0_CLK1_N
AT55	M_A_DIM0_CLK1_P
BA56	M_A_DIM0_CKE0
BB56	M_A_DIM0_CKE1
AW56	M_A_DIM0_CKE2
AY56	M_A_DIM0_CKE3
AU45	/M_A_DIM0_CS0
AU43	/M_A_DIM0_CS1
AT45	M_A_DIM0_ODT0
AT43	M_A_DIM0_ODT1 TP401
BA51	M_A_CAA0
BB54	M_A_CAA1
BA52	M_A_CAA2
AY52	M_A_CAA3
AW52	M_A_CAA4
AY55	M_A_CAA5
AW54	M_A_CAA6
BA54	M_A_CAA7
BA55	M_A_CAA8
AY54	M_A_CAA9
AU46	M_A_CAB0
AU48	M_A_CAB1
AT46	M_A_CAB2
AU50	M_A_CAB3
AU52	M_A_CAB4
AY51	M_A_CAB5
AT48	M_A_CAB6
AT50	M_A_CAB7
BB50	M_A_CAB8
AY50	M_A_CAB9
BA50	
BB52	
AM70	M_A_DQS0_N
AM69	M_A_DQS0_P
AT69	M_A_DQS1_N
AT70	M_A_DQS1_P
BA64	M_A_DQS4_N
AY64	M_A_DQS4_P
AY60	M_A_DQS5_N
BA60	M_A_DQS5_P
BA38	M_B_DQS0_N
AY38	M_B_DQS0_P
AY34	M_B_DQS1_N
BA34	M_B_DQS1_P
BA30	M_B_DQS4_N
AY30	M_B_DQS4_P
AY26	M_B_DQS5_N
BA26	M_B_DQS5_P
AW50	
AT52	
AY67	DIMM_VREF_CA
AY68	DIMM0_VREF_DQ
BA67	DIMM1_VREF_DQ
AW67	DDR_VTT_CTRL

U0301 — KABYLAKE_R — DDR2 Interface 3 of 20

Signal	Pin
M_A_D16	AF65
M_A_D17	AF64
M_A_D18	AK65
M_A_D19	AK64
M_A_D20	AF66
M_A_D21	AF67
M_A_D22	AK67
M_A_D23	AK66
M_A_D24	AF70
M_A_D25	AF68
M_A_D26	AH71
M_A_D27	AH68
M_A_D28	AF71
M_A_D29	AF69
M_A_D30	AH70
M_A_D31	AH69
M_A_D48	AT66
M_A_D49	AU66
M_A_D50	AP65
M_A_D51	AN65
M_A_D52	AN66
M_A_D53	AP66
M_A_D54	AT65
M_A_D55	AU65
M_A_D56	AT61
M_A_D57	AU61
M_A_D58	AP60
M_A_D59	AN60
M_A_D60	AN61
M_A_D61	AP61
M_A_D62	AT60
M_A_D63	AU60
M_B_D16	AU40
M_B_D17	AT40
M_B_D18	AT37
M_B_D19	AU37
M_B_D20	AR40
M_B_D21	AP40
M_B_D22	AP37
M_B_D23	AR37
M_B_D24	AT33
M_B_D25	AU33
M_B_D26	AU30
M_B_D27	AT30
M_B_D28	AR33
M_B_D29	AP33
M_B_D30	AR30
M_B_D31	AP30
M_B_D48	AU27
M_B_D49	AT27
M_B_D50	AT25
M_B_D51	AU25
M_B_D52	AP27
M_B_D53	AN27
M_B_D54	AN25
M_B_D55	AP25
M_B_D56	AT22
M_B_D57	AU22
M_B_D58	AU21
M_B_D59	AT21
M_B_D60	AN22
M_B_D61	AP22
M_B_D62	AP21
M_B_D63	AN21

Signal	Pin
DDR1_DQ_0/DDR0_DQ_16	
DDR1_DQ_1/DDR0_DQ_17	
DDR1_DQ_2/DDR0_DQ_18	
DDR1_DQ_3/DDR0_DQ_19	
DDR1_DQ_4/DDR0_DQ_20	
DDR1_DQ_5/DDR0_DQ_21	
DDR1_DQ_6/DDR0_DQ_22	
DDR1_DQ_7/DDR0_DQ_23	
DDR1_DQ_8/DDR0_DQ_24	
DDR1_DQ_9/DDR0_DQ_25	
DDR1_DQ_10/DDR0_DQ_26	
DDR1_DQ_11/DDR0_DQ_27	
DDR1_DQ_12/DDR0_DQ_28	
DDR1_DQ_13/DDR0_DQ_29	
DDR1_DQ_14/DDR0_DQ_30	
DDR1_DQ_15/DDR0_DQ_31	
DDR1_DQ_16/DDR0_DQ_48	
DDR1_DQ_17/DDR0_DQ_49	
DDR1_DQ_18/DDR0_DQ_50	
DDR1_DQ_19/DDR0_DQ_51	
DDR1_DQ_20/DDR0_DQ_52	
DDR1_DQ_21/DDR0_DQ_53	
DDR1_DQ_22/DDR0_DQ_54	
DDR1_DQ_23/DDR0_DQ_55	
DDR1_DQ_24/DDR0_DQ_56	
DDR1_DQ_25/DDR0_DQ_57	
DDR1_DQ_26/DDR0_DQ_58	
DDR1_DQ_27/DDR0_DQ_59	
DDR1_DQ_28/DDR0_DQ_60	
DDR1_DQ_29/DDR0_DQ_61	
DDR1_DQ_30/DDR0_DQ_62	
DDR1_DQ_31/DDR0_DQ_63	
DDR1_DQ_32/DDR1_DQ_16	
DDR1_DQ_33/DDR1_DQ_17	
DDR1_DQ_34/DDR1_DQ_18	
DDR1_DQ_35/DDR1_DQ_19	
DDR1_DQ_36/DDR1_DQ_20	
DDR1_DQ_37/DDR1_DQ_21	
DDR1_DQ_38/DDR1_DQ_22	
DDR1_DQ_39/DDR1_DQ_23	
DDR1_DQ_40/DDR1_DQ_24	
DDR1_DQ_41/DDR1_DQ_25	
DDR1_DQ_42/DDR1_DQ_26	
DDR1_DQ_43/DDR1_DQ_27	
DDR1_DQ_44/DDR1_DQ_28	
DDR1_DQ_45/DDR1_DQ_29	
DDR1_DQ_46/DDR1_DQ_30	
DDR1_DQ_47/DDR1_DQ_31	
DDR1_DQ_48	
DDR1_DQ_49	
DDR1_DQ_50	
DDR1_DQ_51	
DDR1_DQ_52	
DDR1_DQ_53	
DDR1_DQ_54	
DDR1_DQ_55	
DDR1_DQ_56	
DDR1_DQ_57	
DDR1_DQ_58	
DDR1_DQ_59	
DDR1_DQ_60	
DDR1_DQ_61	
DDR1_DQ_62	
DDR1_DQ_63	

Signal	Pin
DDR1_CKN_0	
DDR1_CKP_0	
DDR1_CKN_1	
DDR1_CKP_1	
DDR1_CKE_0	
DDR1_CKE_1	
DDR1_CKE_2/NC	
DDR1_CKE_3/NC	
DDR1_CS_0	
DDR1_CS_1	
DDR1_ODT_0	
NC/DDR1_ODT_1	
DDR1_CAA_0/DDR1_MA_5	
DDR1_CAA_1/DDR1_MA_9	
DDR1_CAA_2/DDR1_MA_6	
DDR1_CAA_3/DDR1_MA_8	
DDR1_CAA_4/DDR1_MA_7	
DDR1_CAA_5/DDR1_BG_0	
DDR1_CAA_6/DDR1_MA_12	
DDR1_CAA_7/DDR1_MA_11	
DDR1_CAA_8/DDR1_ACT	
DDR1_CAA_9/DDR1_BG_1	
DDR1_CAB_0/DDR1_MA_13	
DDR1_CAB_1/DDR1_MA_15	
DDR1_CAB_2/DDR1_MA_14	
DDR1_CAB_3/DDR1_MA_16	
DDR1_CAB_4/DDR1_BA_0	
DDR1_CAB_5/DDR1_MA_2	
DDR1_CAB_6/DDR1_BA_1	
DDR1_CAB_7/DDR1_MA_10	
DDR1_CAB_8/DDR1_MA_1	
DDR1_CAB_9/DDR1_MA_0	
NC/DDR1_MA_3	
NC/DDR1_MA_4	
DDR1_DQSN_0/DDR0_DQSN_2	
DDR1_DQSP_0/DDR0_DQSP_2	
DDR1_DQSN_1/DDR0_DQSN_3	
DDR1_DQSP_1/DDR0_DQSP_3	
DDR1_DQSN_2/DDR0_DQSN_6	
DDR1_DQSP_2/DDR0_DQSP_6	
DDR1_DQSN_3/DDR0_DQSN_7	
DDR1_DQSP_3/DDR0_DQSP_7	
DDR1_DQSN_4/DDR1_DQSN_2	
DDR1_DQSP_4/DDR1_DQSP_2	
DDR1_DQSN_5/DDR1_DQSN_3	
DDR1_DQSP_5/DDR1_DQSP_3	
DDR1_DQSN_6	
DDR1_DQSP_6	
DDR1_DQSN_7	
DDR1_DQSP_7	
NC/DDR1_ALERT	
NC/DDR1_PAR	
DRAM_RESET	
DDR_RCOMP_0	
DDR_RCOMP_1	
DDR_RCOMP_2	

Signal	Pin
AN45	M_B_DIM0_CLK0_N
AP45	M_B_DIM0_CLK0_P
AN46	M_B_DIM0_CLK1_N
AP46	M_B_DIM0_CLK1_P
AN56	M_B_DIM0_CKE0
AP55	M_B_DIM0_CKE1
AN55	M_B_DIM0_CKE2
AP53	M_B_DIM0_CKE3
BB42	/M_B_DIM0_CS0
AY42	/M_B_DIM0_CS1
BA42	M_B_DIM0_ODT0
AW42	M_B_DIM0_ODT1 TP402
AY48	M_B_CAA0
AP50	M_B_CAA1
BA48	M_B_CAA2
BB48	M_B_CAA3
AP48	M_B_CAA4
AP52	M_B_CAA5
AN50	M_B_CAA6
AN48	M_B_CAA7
AN53	M_B_CAA8
AN52	M_B_CAA9
BA43	M_B_CAB0
AY43	M_B_CAB1
AY44	M_B_CAB2
AW44	M_B_CAB3
BB44	M_B_CAB4
AY47	M_B_CAB5
BA44	M_B_CAB6
AW46	M_B_CAB7
AY46	M_B_CAB8
BA46	M_B_CAB9
BB46	
BA47	
AH66	M_A_DQS2_N
AH65	M_A_DQS2_P
AG69	M_A_DQS3_N
AG70	M_A_DQS3_P
AR66	M_A_DQS6_N
AR65	M_A_DQS6_P
AR61	M_A_DQS7_N
AR60	M_A_DQS7_P
AT38	M_B_DQS2_N
AR38	M_B_DQS2_P
AT32	M_B_DQS3_N
AR32	M_B_DQS3_P
AR25	M_B_DQS6_N
AR27	M_B_DQS6_P
AR22	M_B_DQS7_N
AR21	M_B_DQS7_P
AN43	
AP43	
AT13	
AR18	SM_RCOMP_0 R402 200 1%
AT18	SM_RCOMP_1 R403 80.6 1%
AU18	SM_RCOMP_2 R404 162 1%

The type and specification of the components refer to the BOM

				NA	
				ECA NO	DATE
DESIGNED	LIWENSHENG87654565	Watt		65674354	
REVIEWED	LISI XXXXX				
		VER	PART_NUMBER	SHEET 2 OF 2	
		A	03030001	HUAWEI TECH CO.,LTD.	

5_CPU_+VCORE

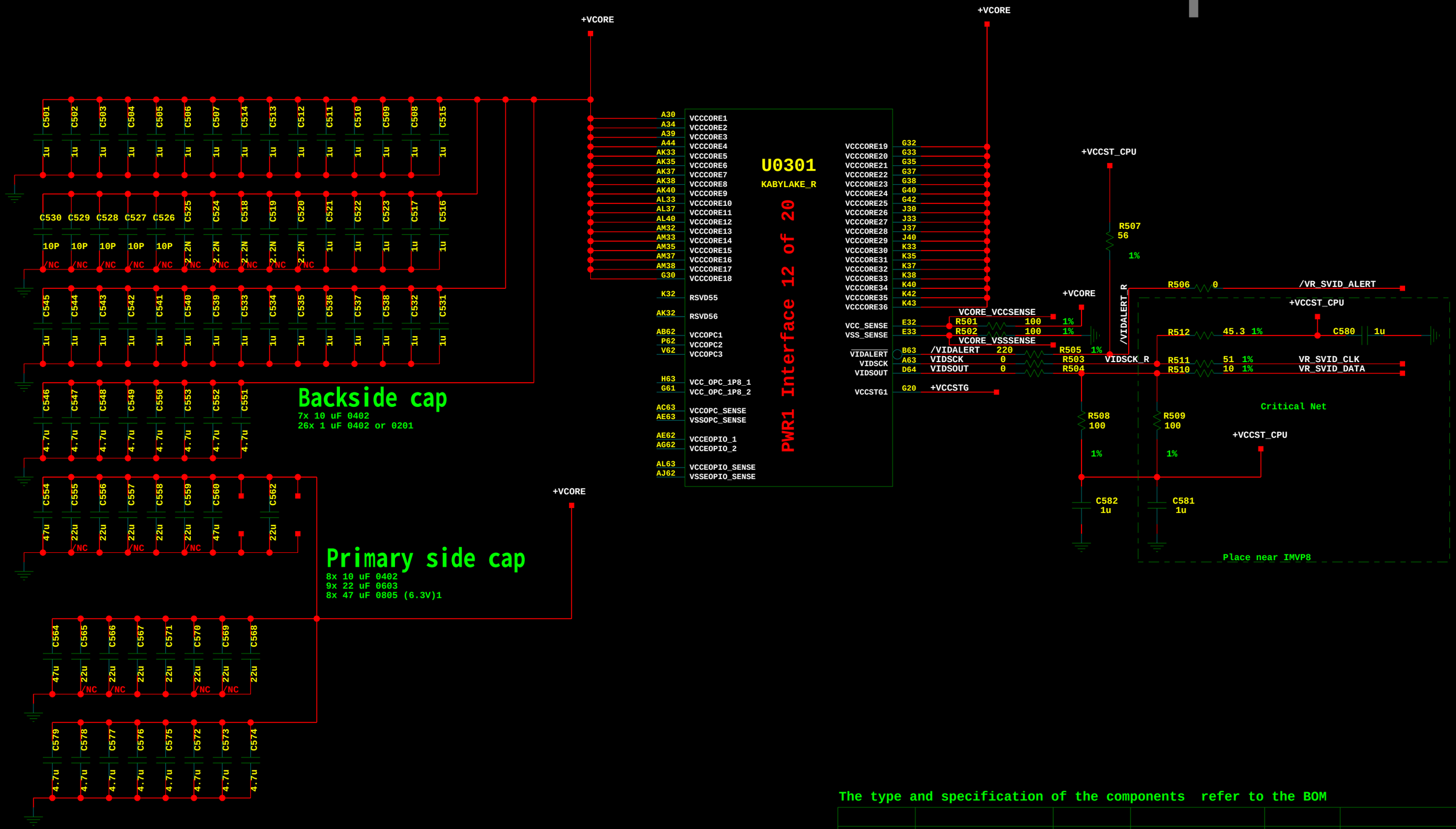

The type and specification of the components refer to the BOM

				NA	
				ECA NO	DATE
DESIGNED	LIWENSHENG87654565	Watt		65674354	
REVIEWED	LISI XXXXX				
		VER	PART_NUMBER	SHEET 3 OF 3	
		A	03030001	HUAWEI TECH CO.,LTD.	

6_CPU_+VCCGT

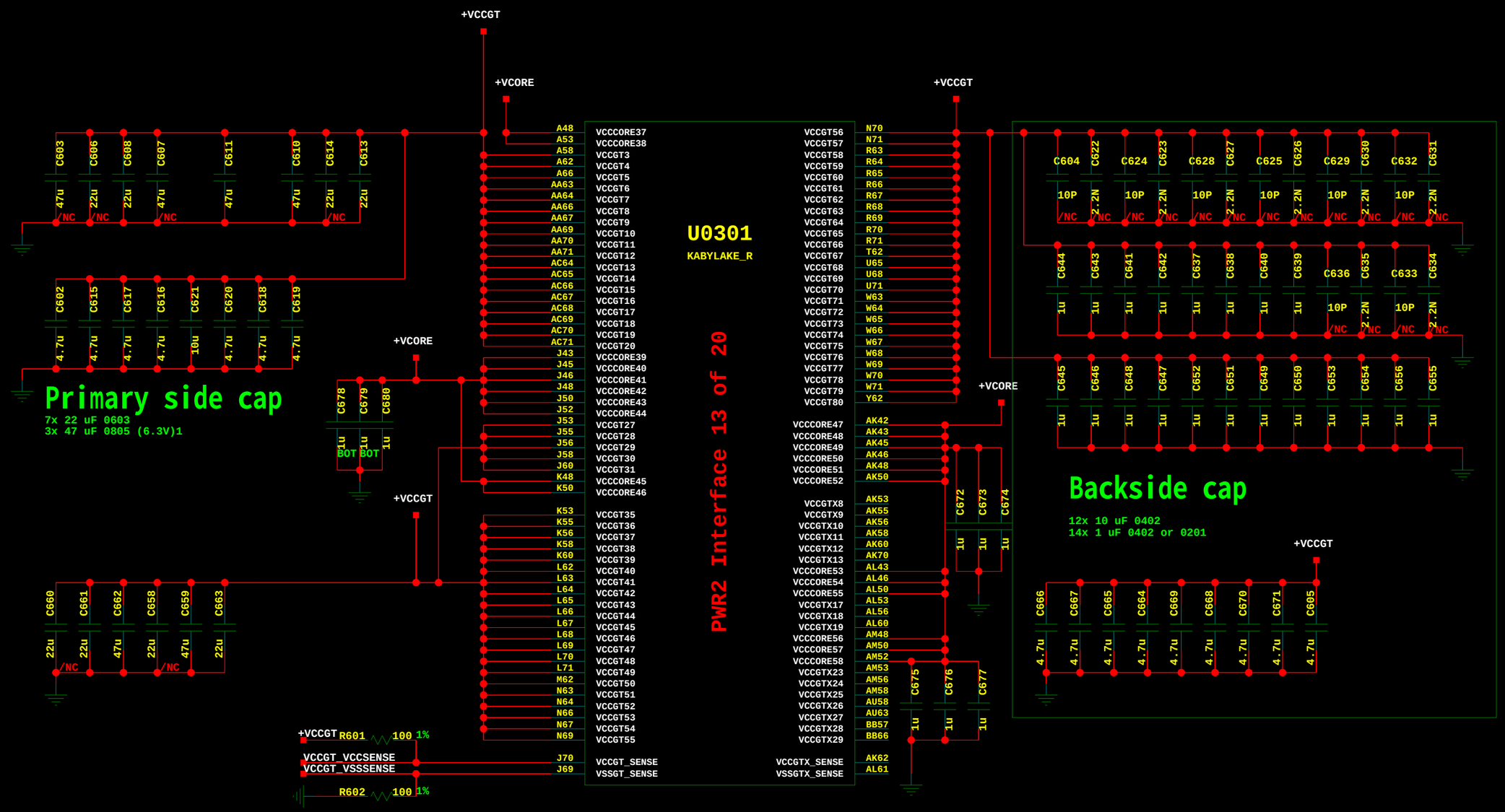

The type and specification of the components refer to the BOM

				NA	
				ECA NO	DATE
DESIGNED	LIWENSHENG87654565	Schematic1		65674354	
REVIEWED	LISI XXXXX			6_CPU_ +VCCGT	
		VER	PART_NUMBER	SHEET	OF 75
		A	03030001	HUAWEI TECH CO.,LTD.	

7_CPU_ +VCCQ/IO/SA

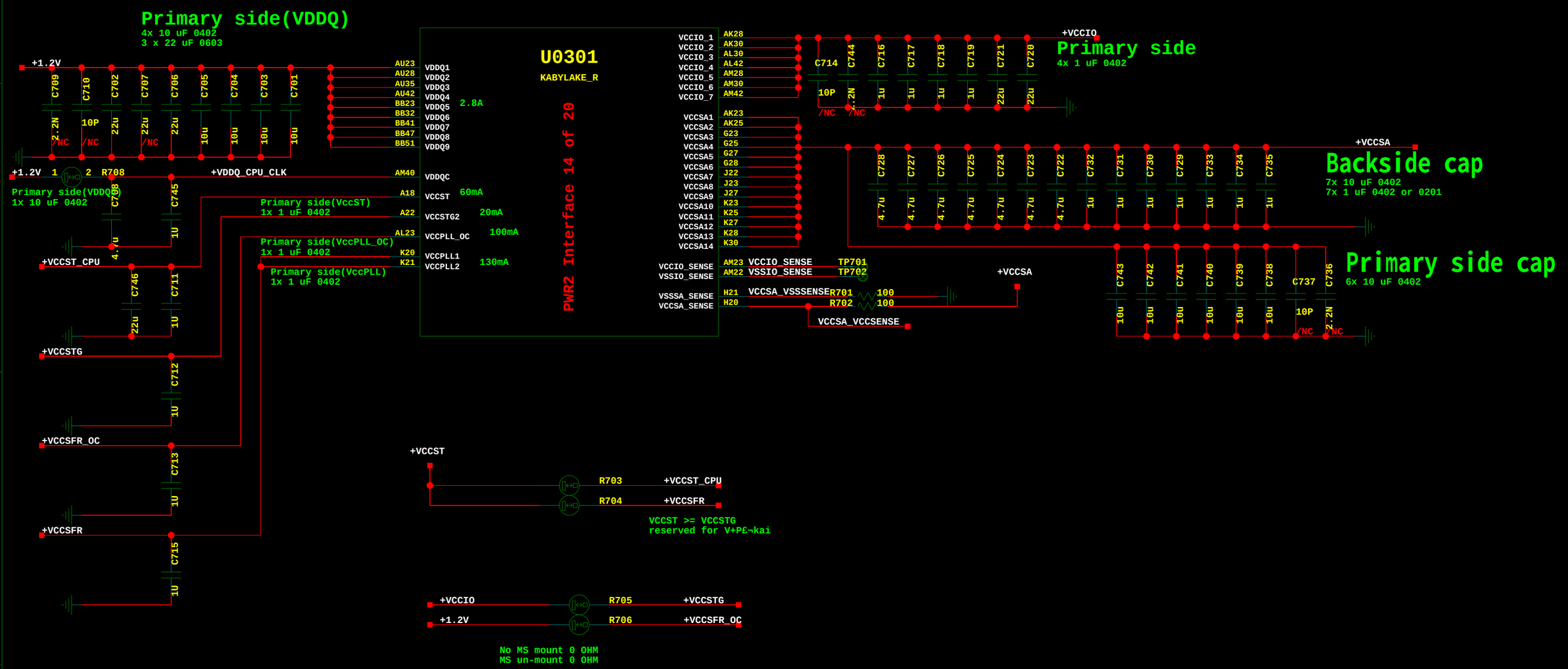

The type and specification of the components refer to the BOM

				NA	
				ECA NO	DATE
DESIGNED	LIWENSHENG87654565	Watt		65674354	
REVIEWED	LISI XXXXX				
		VER	PART_NUMBER	SHEET 5 OF 5	
		A	03030001	HUAWEI TECH CO.,LTD.	

8_CPU_ GND

The type and specification of the components refer to the BOM

				NA	
				ECA NO	DATE
DESIGNED	LIWENSHENG87654565	Watt		65674354	
REVIEWED	LISI XXXXX				
		VER	PART_NUMBER	SHEET 6 OF 6	
		A	03030001	HUAWEI TECH CO.,LTD.	

9_CPU_ CFG/RSVD/XTAL/THRM_IC

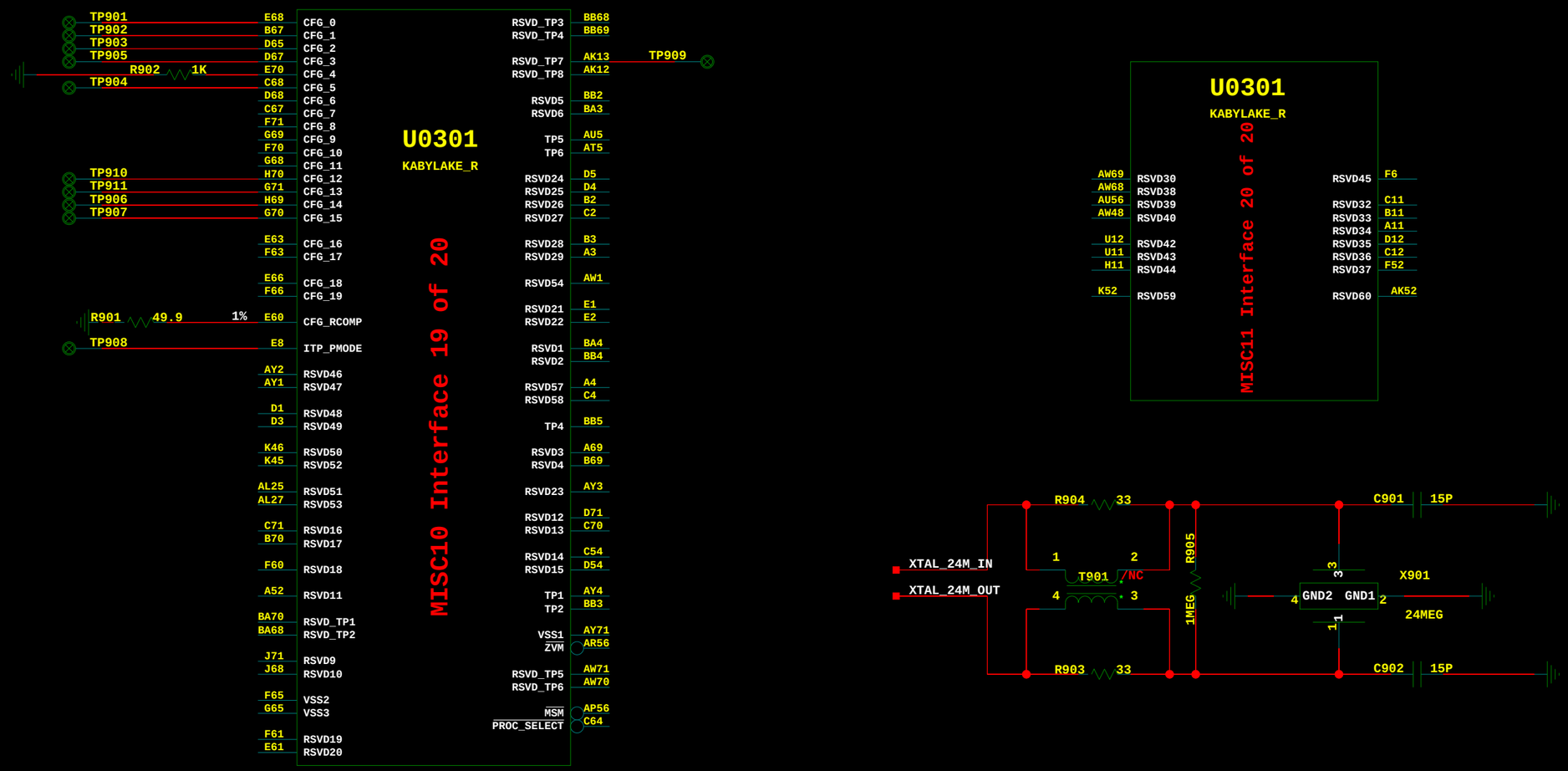

The type and specification of the components refer to the BOM

				NA	
				ECA NO	DATE
DESIGNED	LIWENSHENG87654565	Watt		65674354	
REVIEWED	LISI XXXXX				
		VER	PART_NUMBER	SHEET 7 OF 7	
		A	03030001	HUAWEI TECH CO.,LTD.	

10_PCH_SPI/LPC

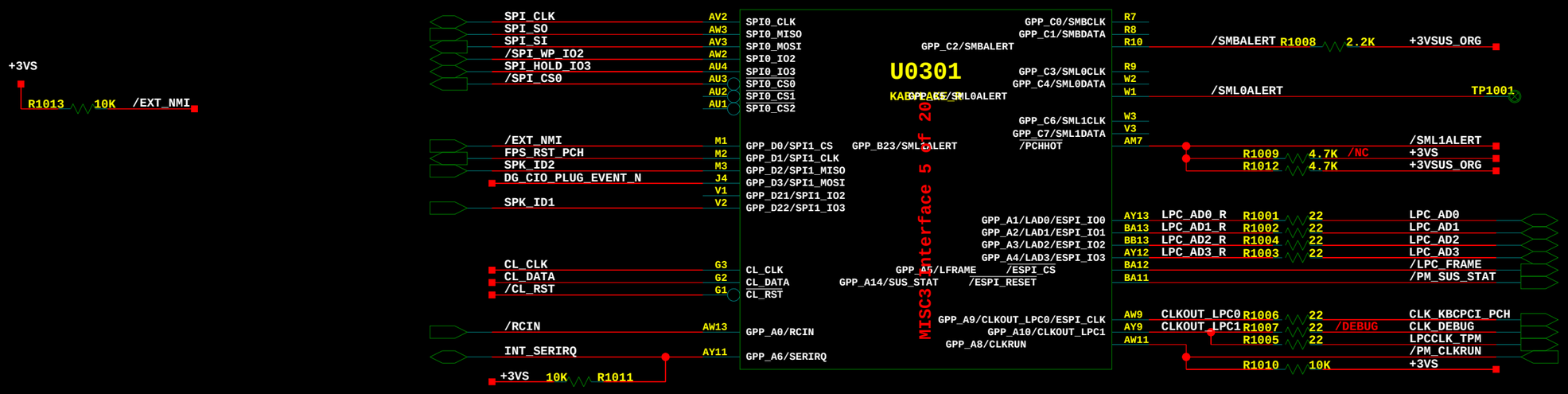

The type and specification of the components refer to the BOM

				NA	
				ECA NO	DATE
DESIGNED	LIWENSHENG87654565	Watt		65674354	
REVIEWED	LISI XXXXX				
		VER	PART_NUMBER	SHEET 34 OF 13	
		A	03030001	HUAWEI TECH CO.,LTD.	

11_PCH_ GSPI/UART/I2C/ISH

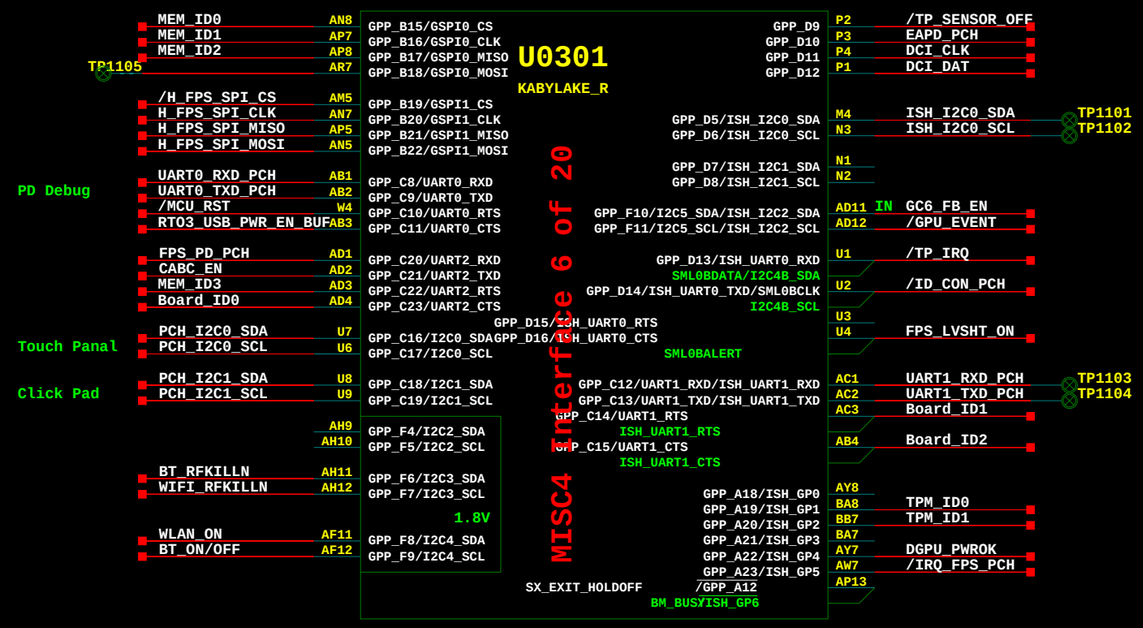

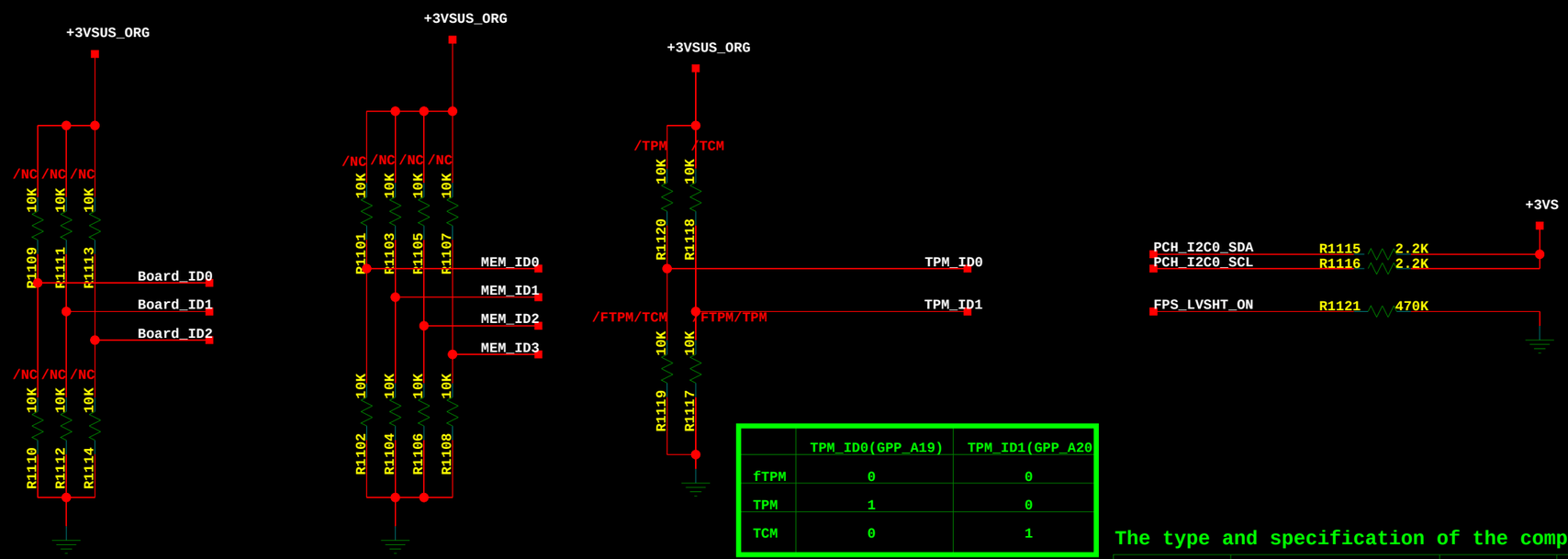

	TPM_ID0(GPP_A19)	TPM_ID1(GPP_A20)
fTPM	0	0
TPM	1	0
TCM	0	1

The type and specification of the components refer to the BOM

				NA	
				ECA NO	DATE
DESIGNED	LIWENSHENG87654565	Watt		65674354	
REVIEWED	LISI XXXXX				
		VER	PART_NUMBER	SHEET 35 OF 14	
		A	03030001	HUAWEI TECH CO.,LTD.	

12_PCH_HDA/I2S/DMIC/SDIO

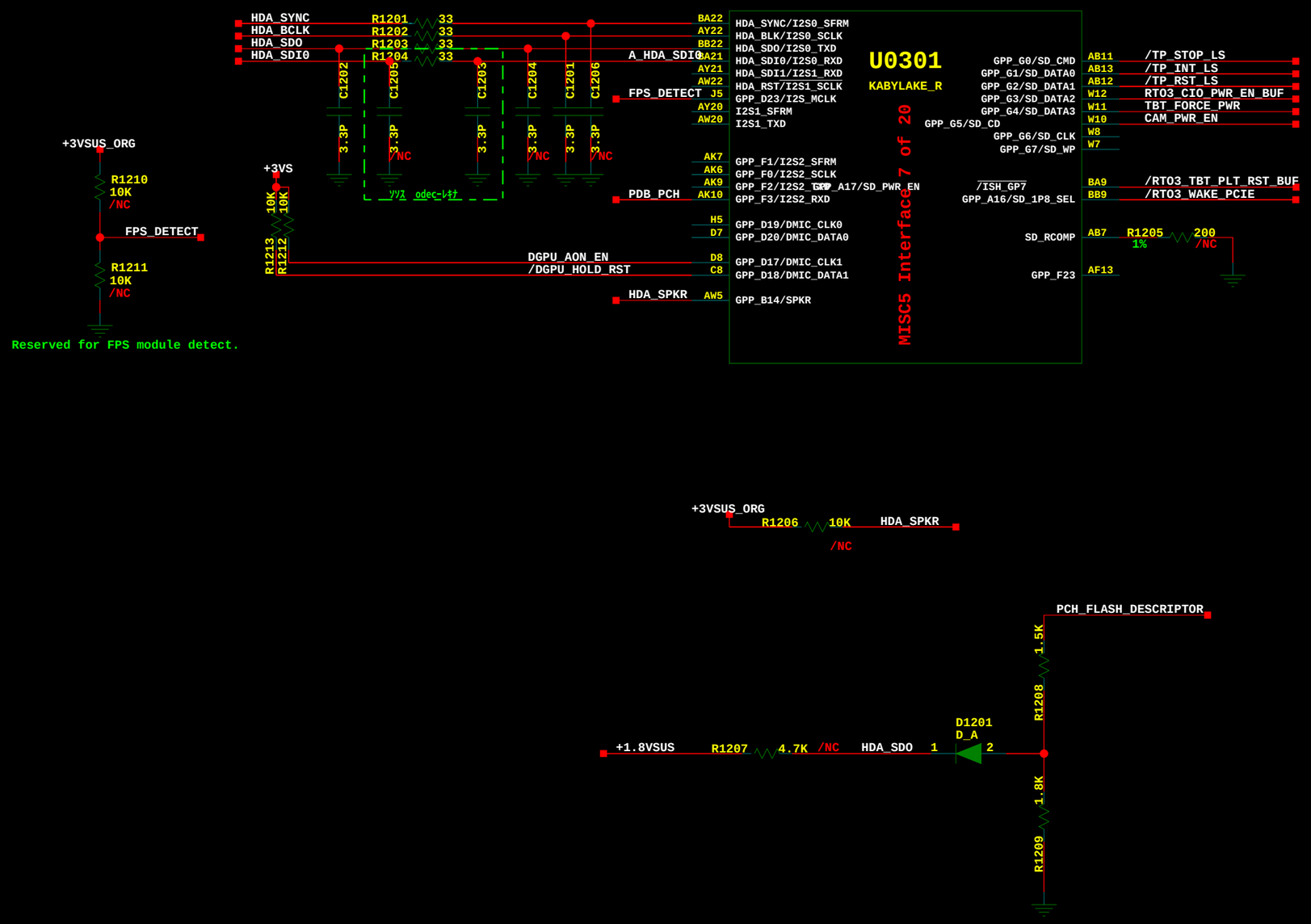

The type and specification of the components refer to the BOM

				NA	
				ECA NO	DATE
DESIGNED	LIWENSHENG87654565	Watt		65674354	
REVIEWED	LISI XXXXX				
		VER	PART_NUMBER	SHEET 36 OF 15	
		A	03030001	HUAWEI TECH CO.,LTD.	

13_PCH_PCIE/SATA/USB

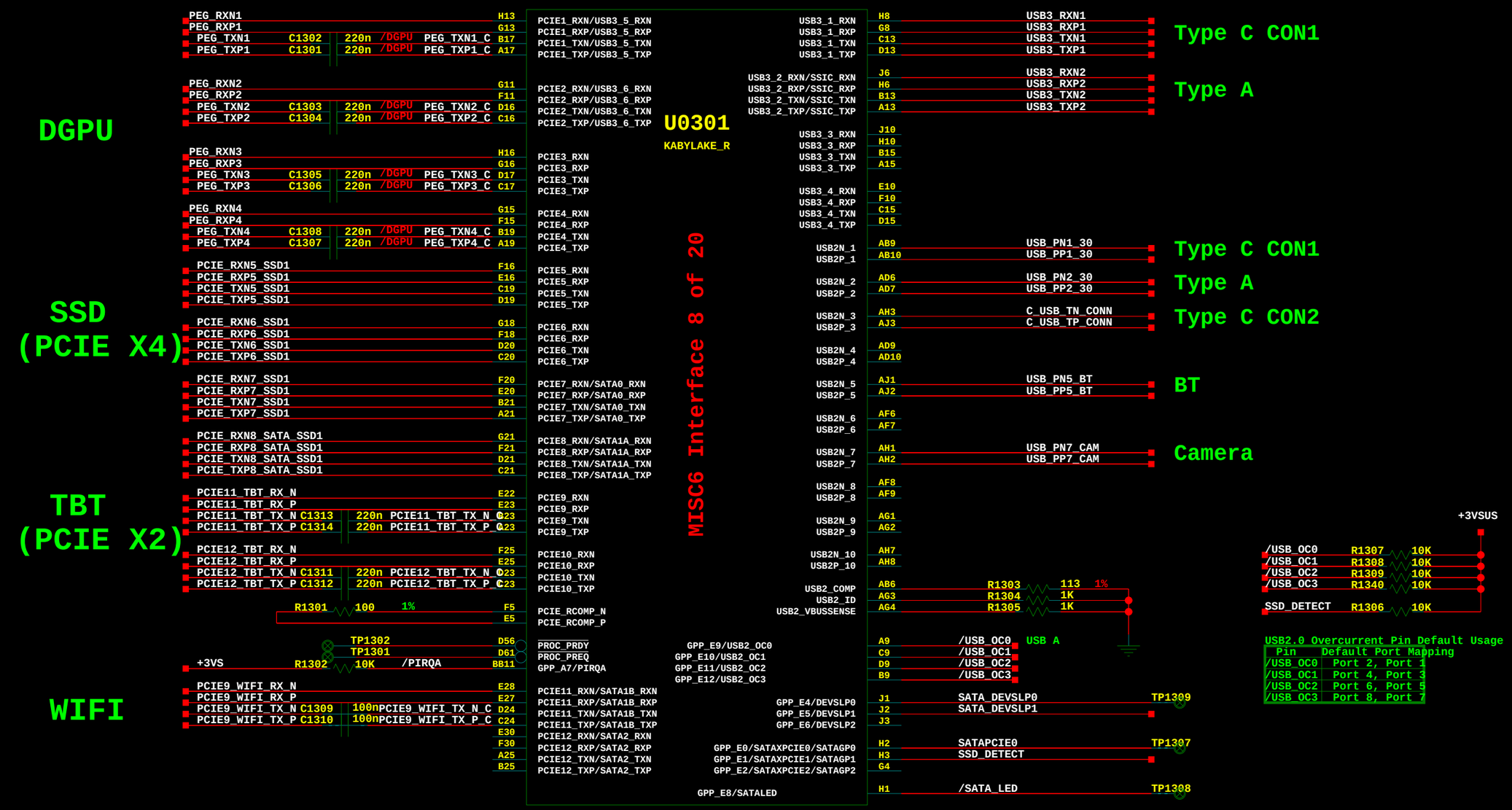

The type and specification of the components refer to the BOM

				NA	
				ECA NO	DATE
DESIGNED	LIWENSHENG87654565	Watt		65674354	
REVIEWED	LISI XXXXX				
		VER	PART_NUMBER	SHEET 37 OF 16	
		A	03030001	HUAWEI TECH CO.,LTD.	

14_PCH_ CLK/RTC/XTAL

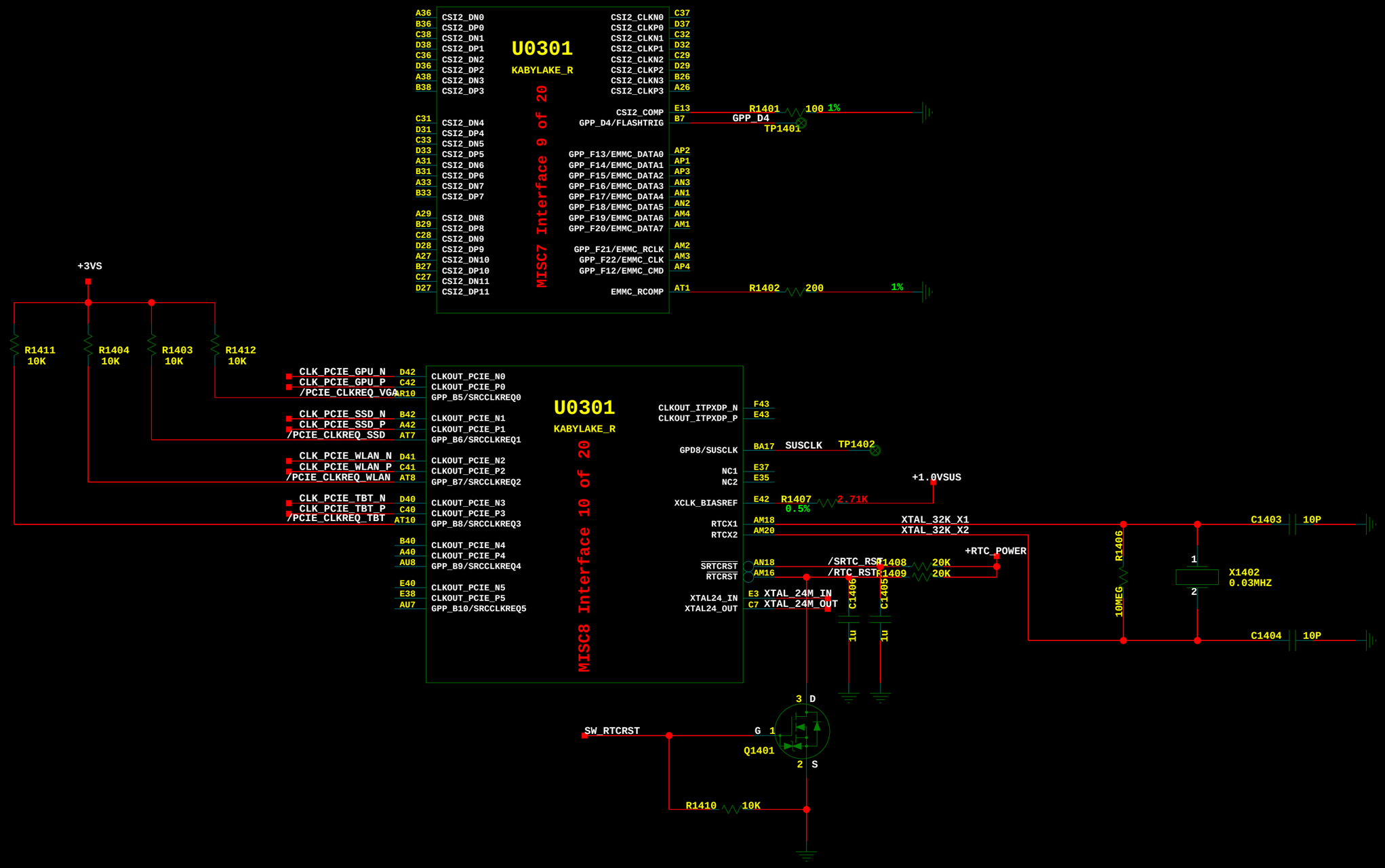

The type and specification of the components refer to the BOM

				NA	
				ECA NO	DATE
DESIGNED	LIWENSHENG87654565	Watt		65674354	
REVIEWED	LISI XXXXX				
		VER	PART_NUMBER	SHEET 38 OF 17	
		A	03030001	HUAWEI TECH CO.,LTD.	

15_PCH_Power Management

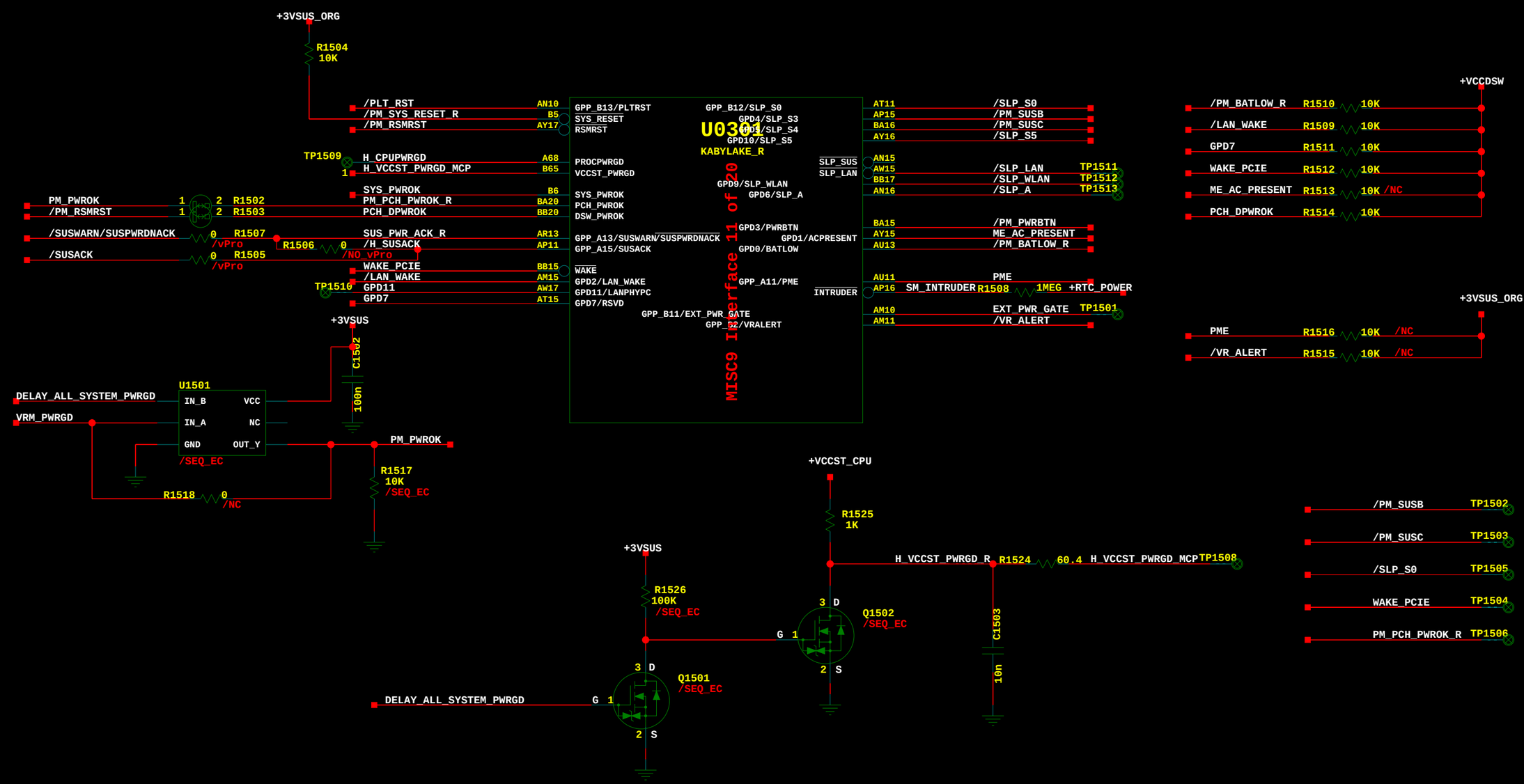

The type and specification of the components refer to the BOM

				NA	
				ECA NO	DATE
DESIGNED	LIWENSHENG87654565	Watt		65674354	
REVIEWED	LISI XXXXX				
		VER	PART_NUMBER	SHEET 39 OF 18	
		A	03030001	HUAWEI TECH CO.,LTD.	

16_PCH_Power

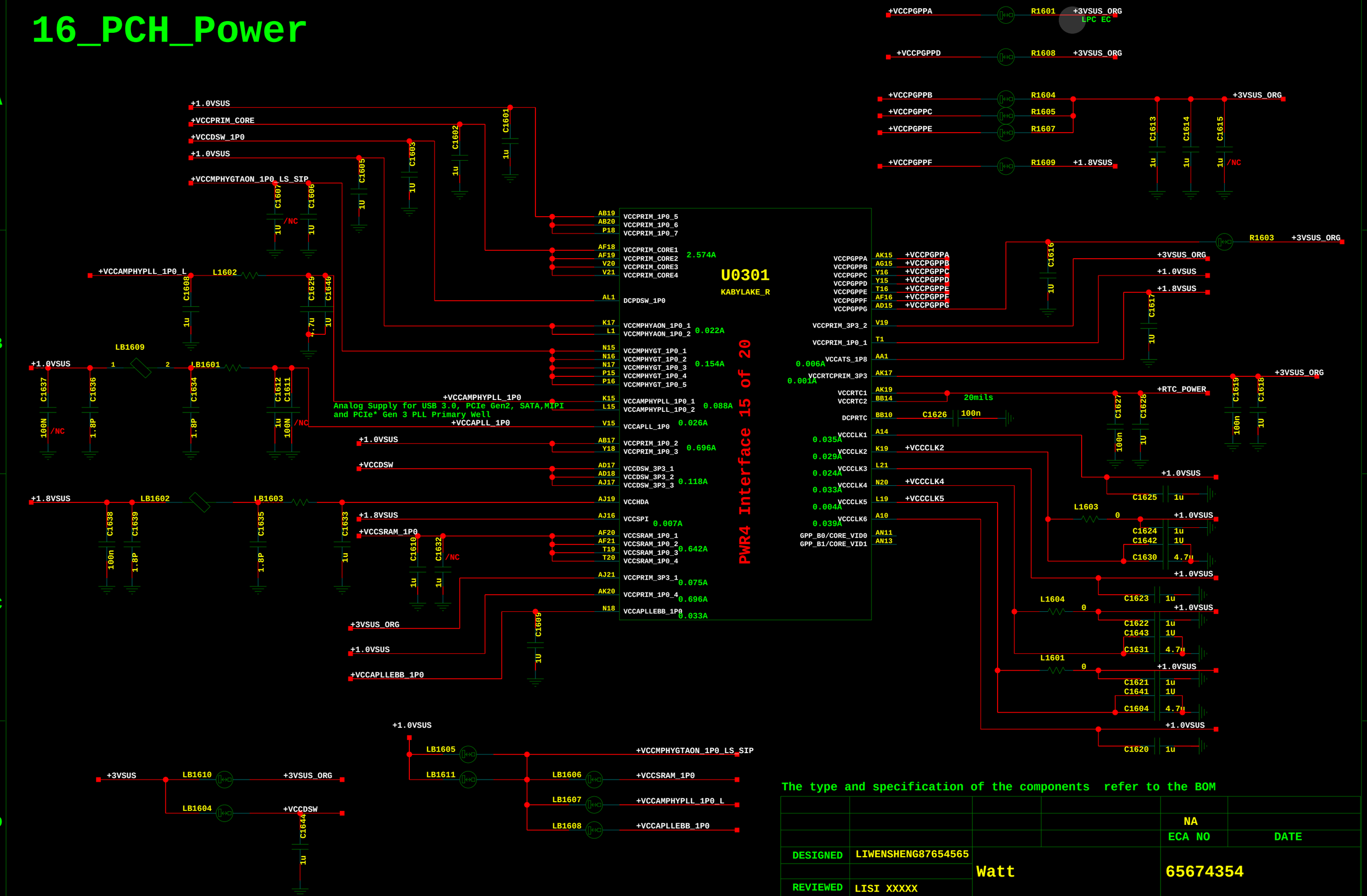

The type and specification of the components refer to the BOM

				NA	
				ECA NO	DATE
DESIGNED	LIWENSHENG87654565	Watt		65674354	
REVIEWED	LISI XXXXX				
		VER	PART_NUMBER	SHEET 40 OF 19	
		A	03030001	HUAWEI TECH CO.,LTD.	

17_BIOS/EC ROM

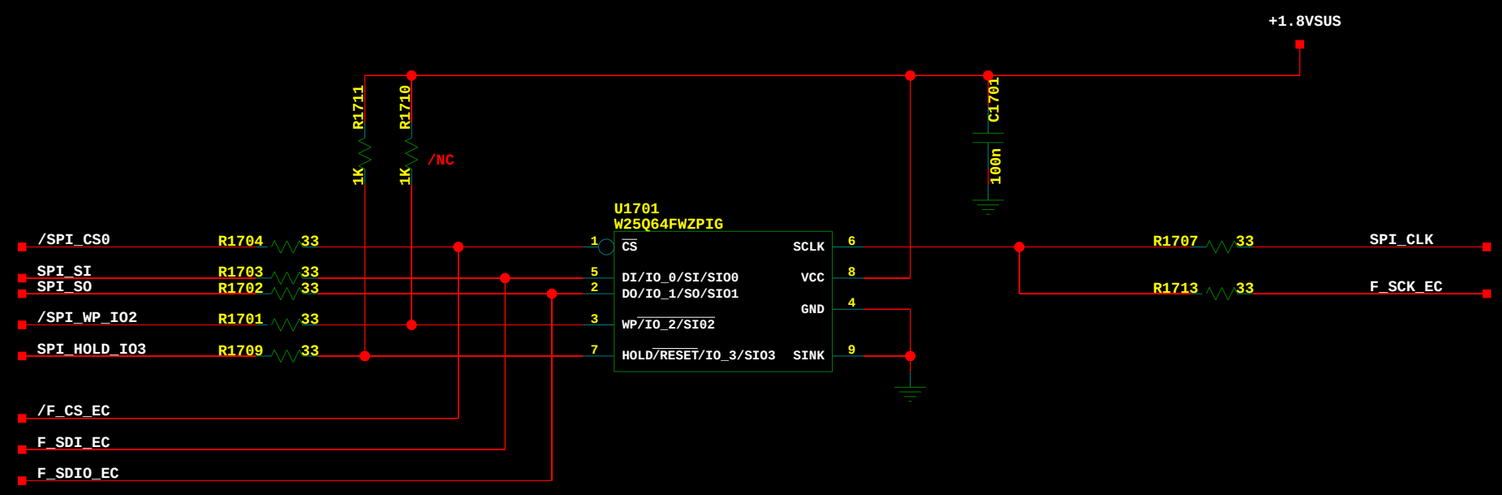

The type and specification of the components refer to the BOM

				NA	
				ECA NO	DATE
DESIGNED	LIWENSHENG87654565	Watt		65674354	
REVIEWED	LISI XXXXX				
		VER	PART_NUMBER	SHEET 41 OF 20	
		A	03030001	HUAWEI TECH CO.,LTD.	

18_LPC_DEBUG

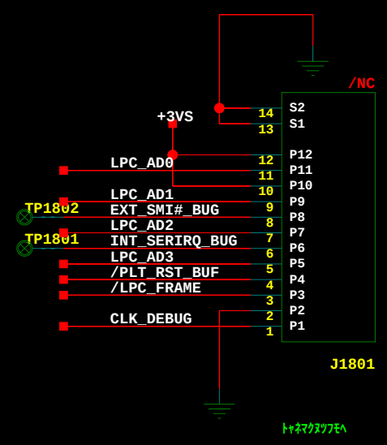

The type and specification of the components refer to the BOM

				NA	
				ECA NO	DATE
DESIGNED	LIWENSHENG87654565	Mach		65674354	
REVIEWED	LISI XXXXX				
		VER	PART_NUMBER	SHEET 97 OF 60	
		A	03030001	HUAWEI TECH CO.,LTD.	

19_BLANK

The type and specification of the components refer to the BOM

				NA	
				ECA NO	DATE
DESIGNED	LIWENSHENG87654565	Mach		65674354	
REVIEWED	LISI XXXXX				
		VER	PART_NUMBER	SHEET 98 OF 61	
		A	03030001	HUAWEI TECH CO.,LTD.	

20_LPDDR3_CHA_D1

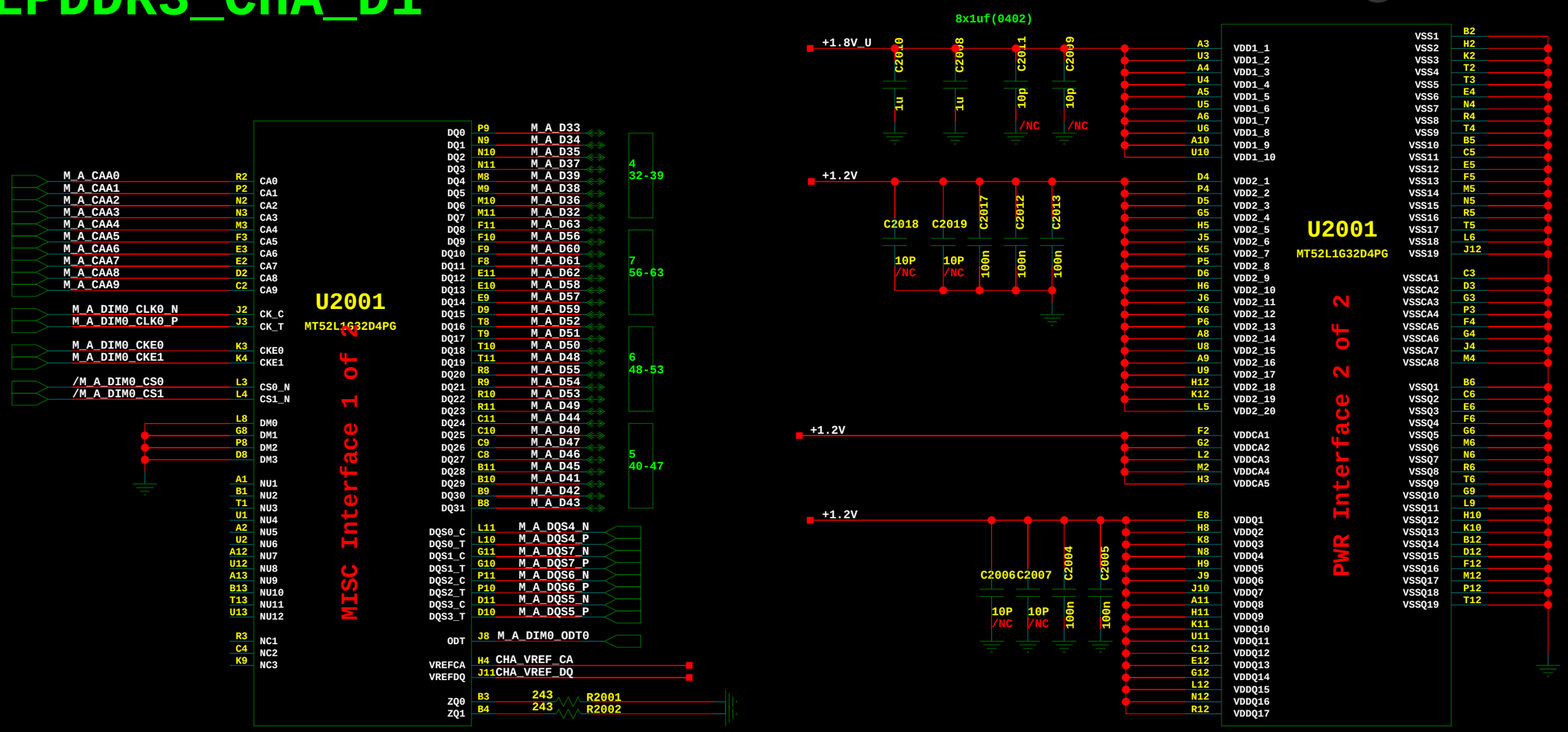

Channel A decoupling Caps

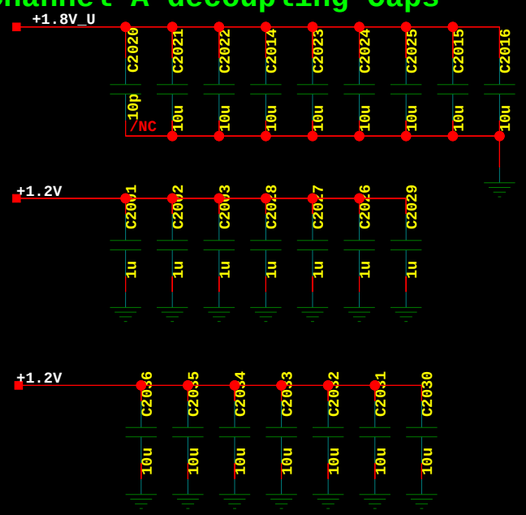

Channel A D1 Terminations

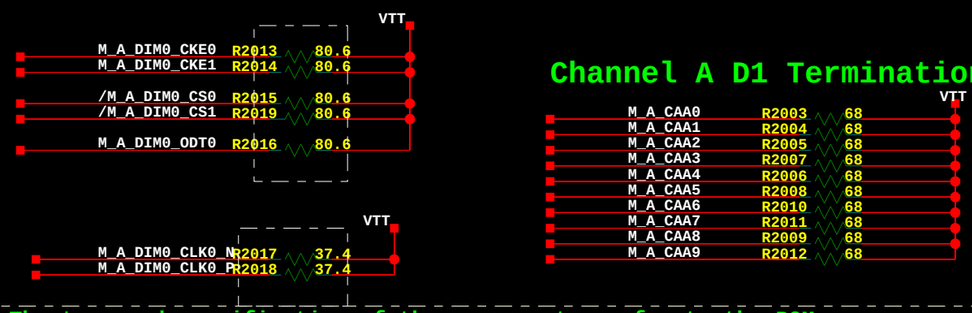

The type and specification of the components refer to the BOM

				NA	
				ECA NO	DATE
DESIGNED	LIWENSHENG87654565	Mach		65674354	
REVIEWED	LISI XXXXX			20_LPDDR3_CHA_D1	
		VER	PART_NUMBER	SHEET	OF 75
		A	03030001	HUAWEI TECH CO.,LTD.	

21_LPDDR3 CHA-D2

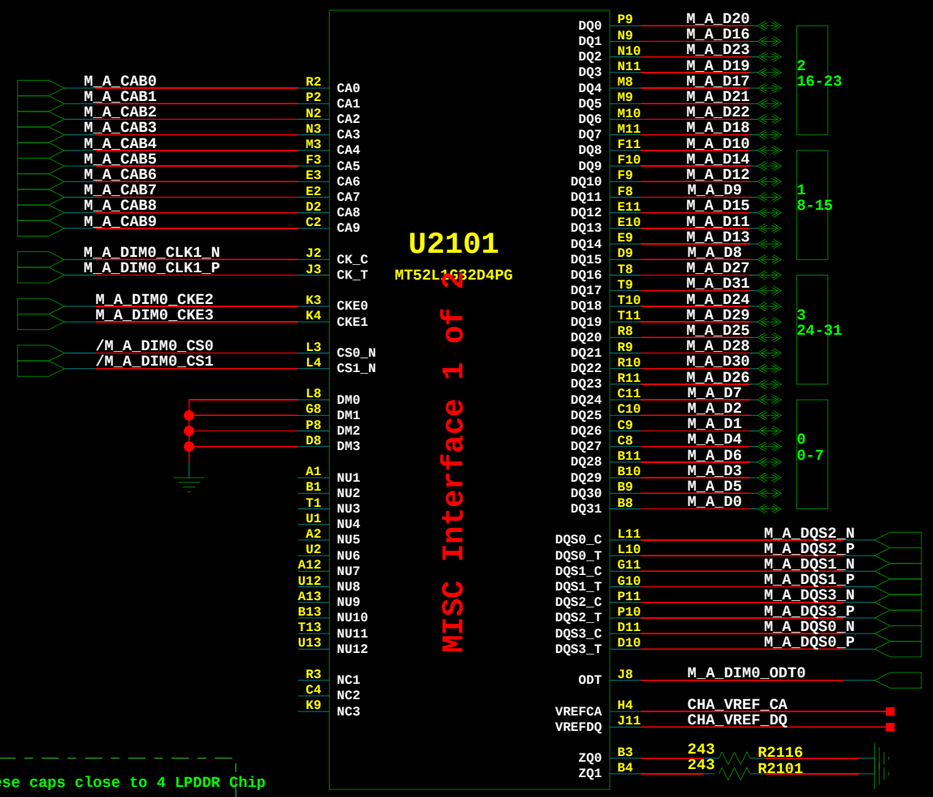

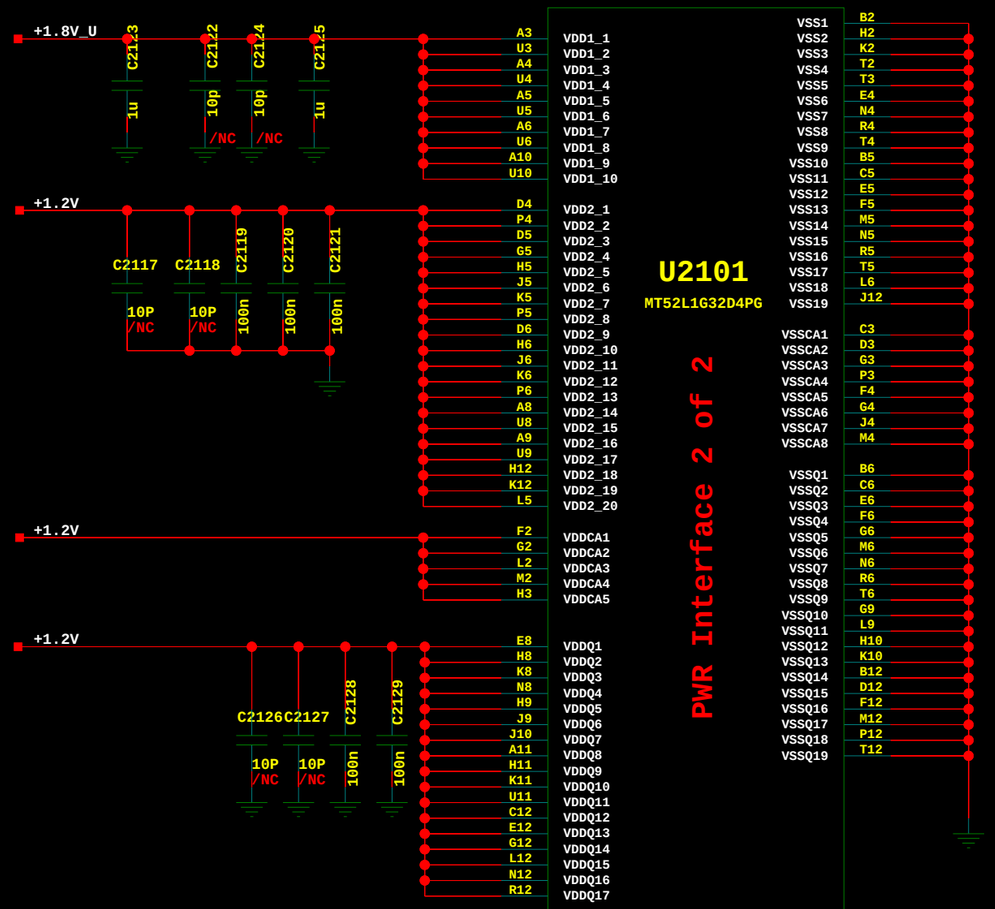

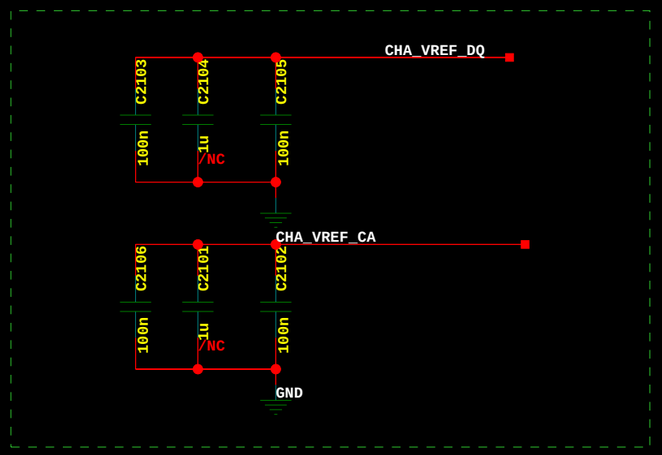

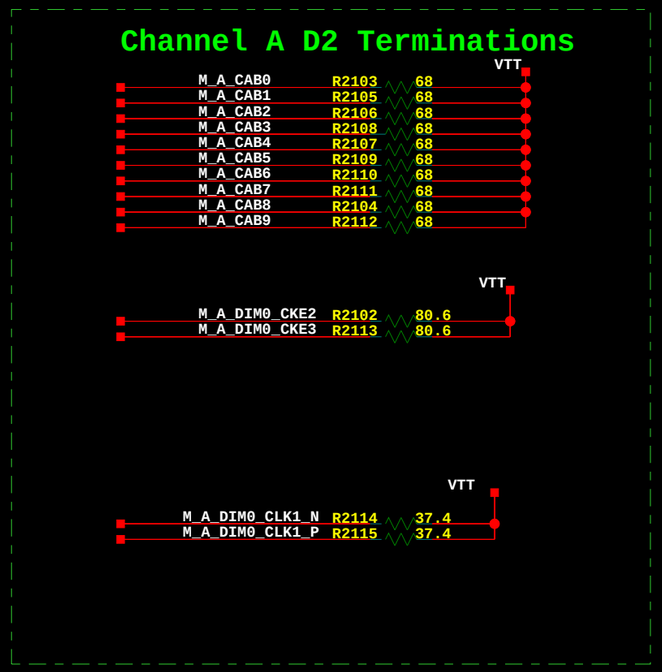

The type and specification of the components refer to the BOM

				NA	
				ECA NO	DATE
DESIGNED	LIUQINKAI 00365571	SH0WATTM		65674354	
REVIEWED	LISI XXXXX				
		VER	PART_NUMBER	SHEET 31 OF 31	
		A	03030001	HUAWEI TECH CO.,LTD.	

22_LPDDR3_CHB-D1

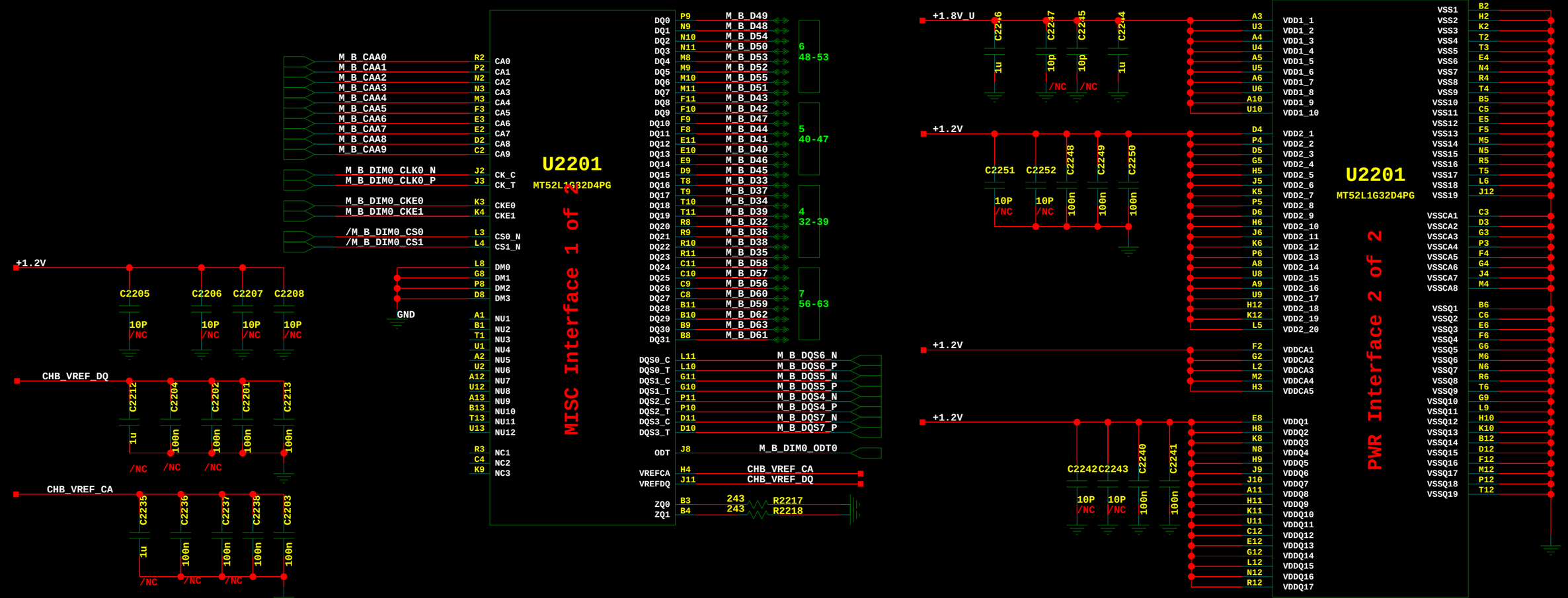

Channel B decoupling Caps

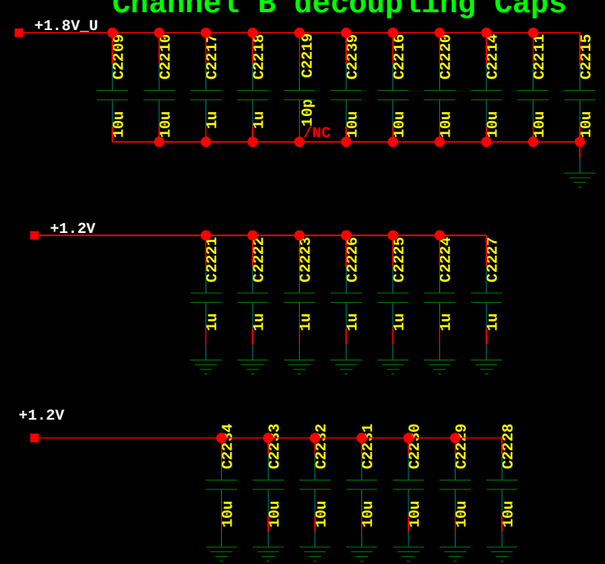

Channel B D1 Terminations

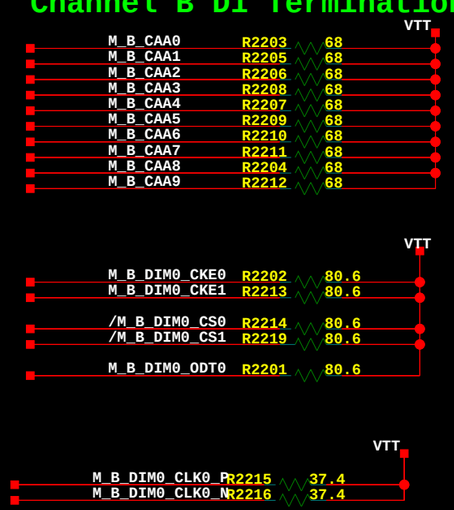

The type and specification of the components refer to the BOM

				NA	
				ECA NO	DATE
DESIGNED	LIUQINKAI 00365571	SH0WATTM		65674354	
REVIEWED	LISI XXXXX				
		VER	PART_NUMBER	SHEET 32 OF 32	
		A	03030001	HUAWEI TECH CO.,LTD.	

23_LPDDR3_CHB-D2

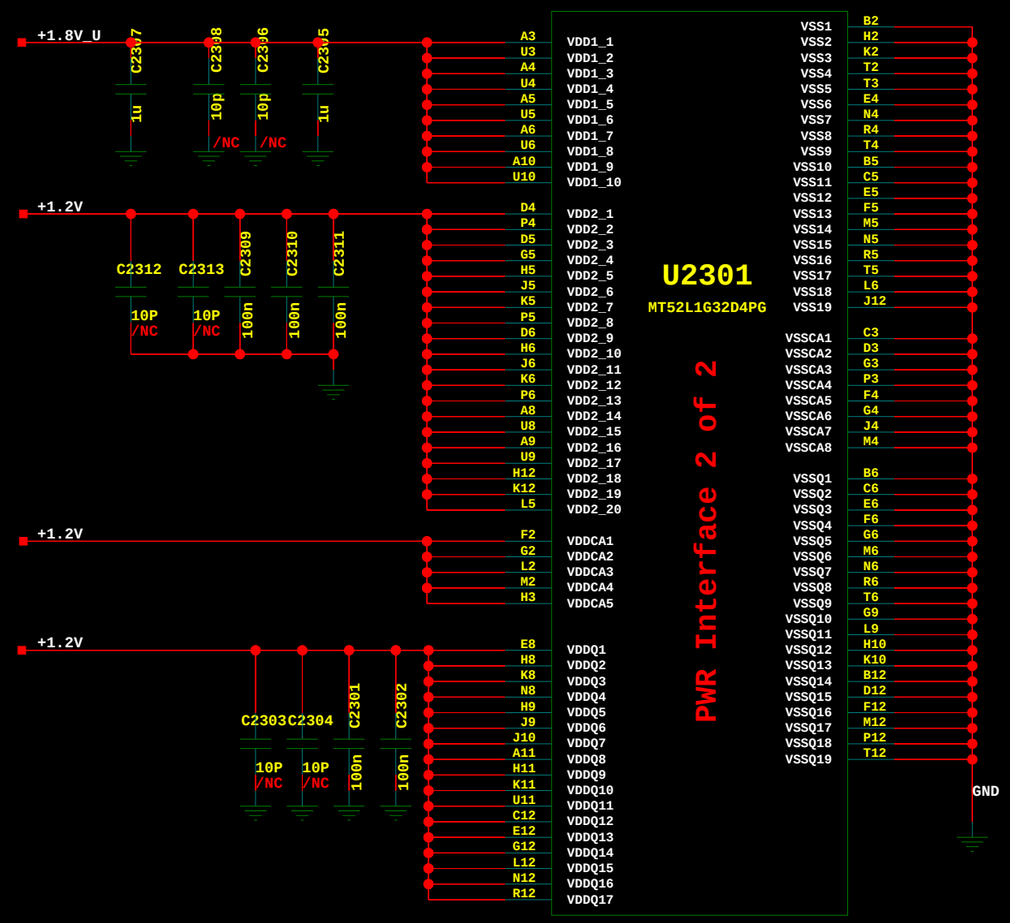

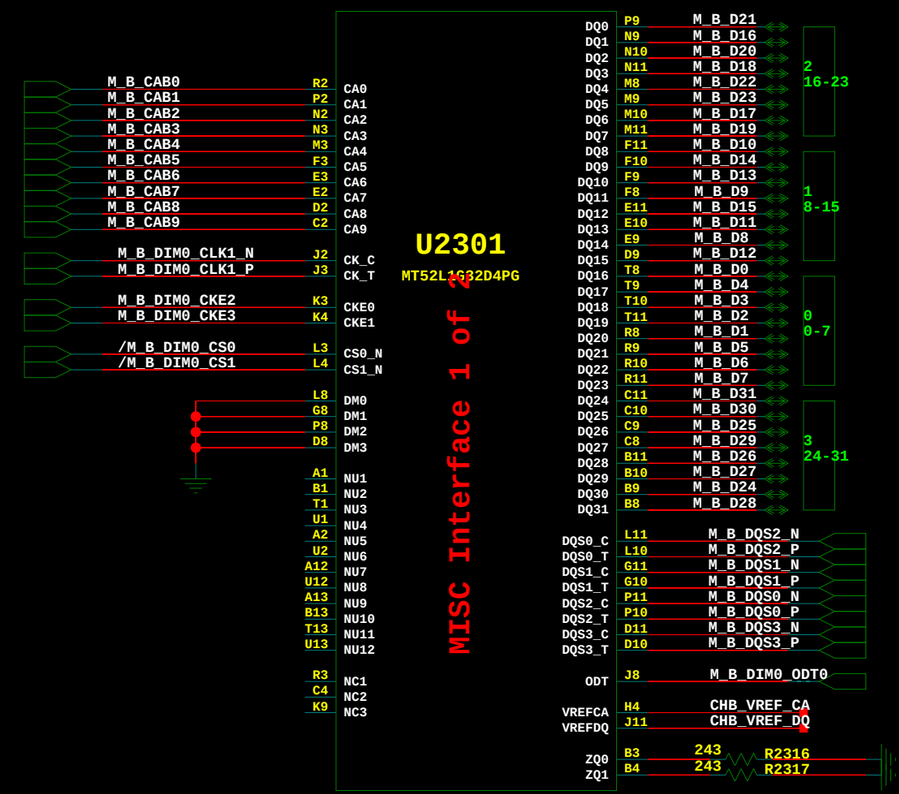

Channel B D2 Terminations

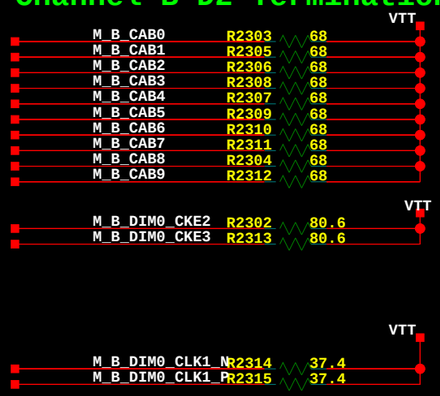

The type and specification of the components refer to the BOM

				NA	
				ECA NO	DATE
DESIGNED	LIUQINKAI 00365571	SH0WATTM		65674354	
REVIEWED	LISI XXXXX				
		VER	PART_NUMBER	SHEET 33 OF 33	
		A	03030001	HUAWEI TECH CO.,LTD.	

24_LPDDR3_ CA/DQ Voltage

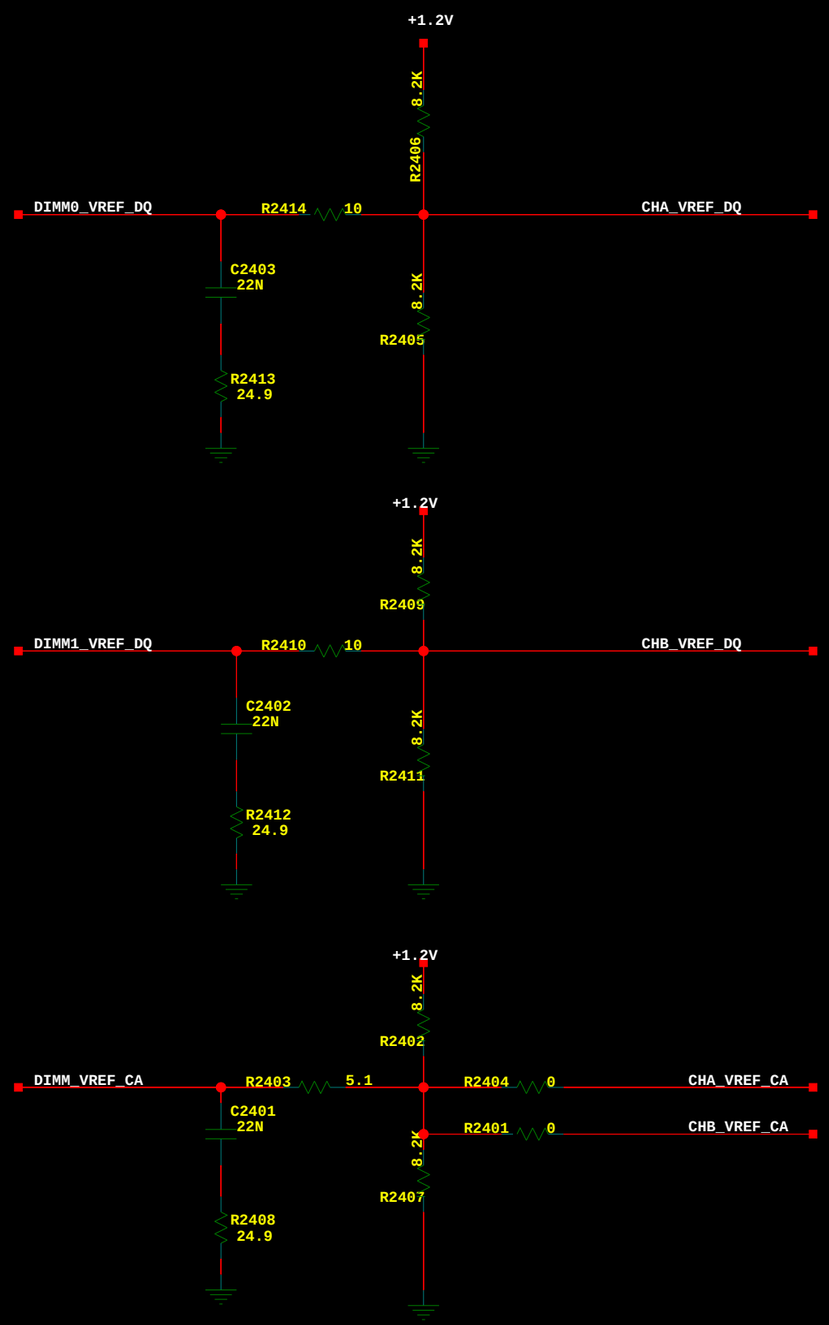

The type and specification of the components refer to the BOM

				NA	
				ECA NO	DATE
DESIGNED	LIWENSHENG87654565	SH0WATTM		65674354	
REVIEWED	LISI XXXXX				
		VER	PART_NUMBER	SHEET 10 OF 10	
		A	03030001	HUAWEI TECH CO.,LTD.	

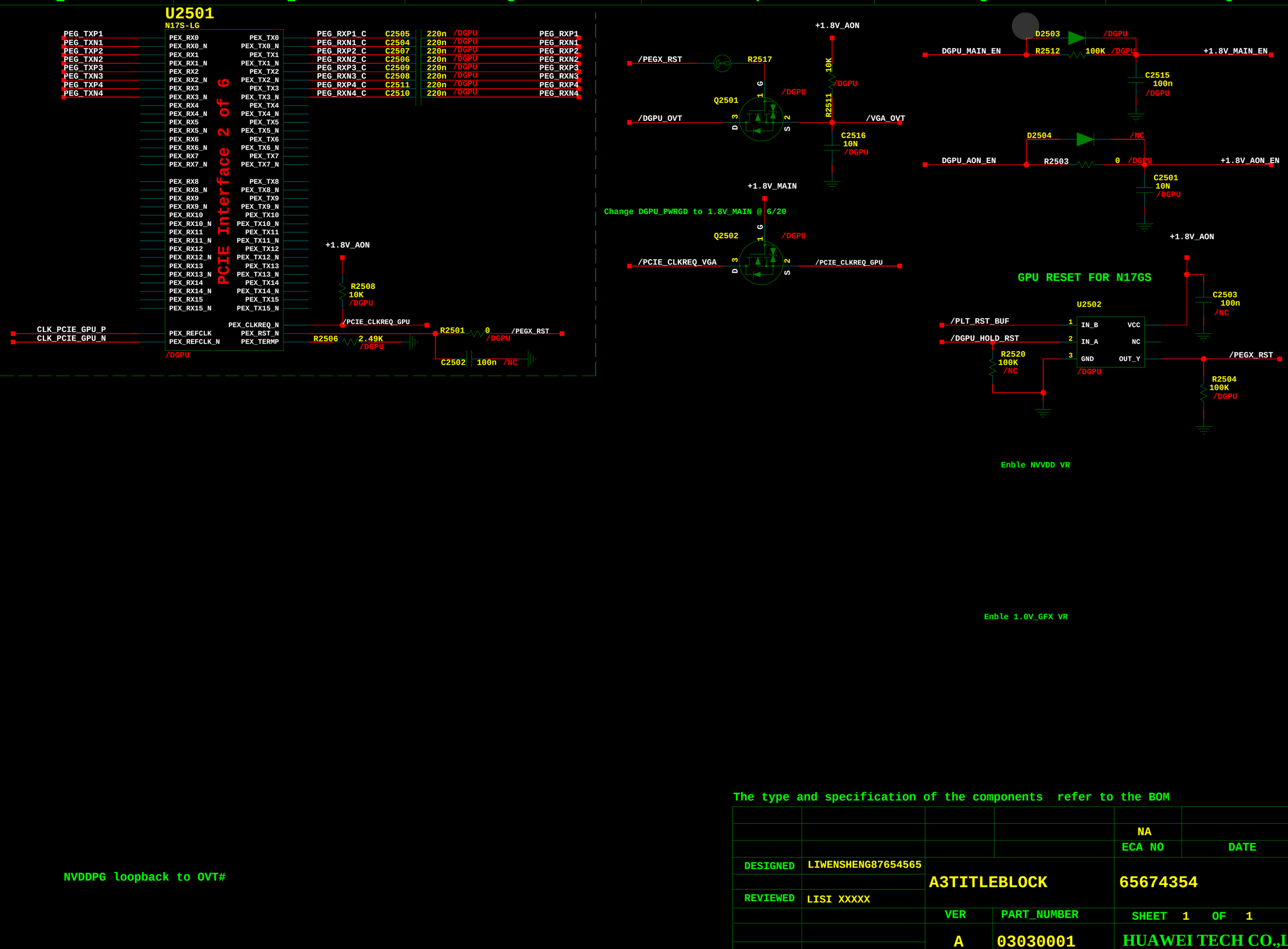

NVDDPG loopback to OVT#

The type and specification of the components refer to the BOM

				NA	
				ECA NO	DATE
DESIGNED	LIWENSHENG87654565	A3TITLEBLOCK		65674354	
REVIEWED	LISI XXXXX				
		VER	PART_NUMBER	SHEET 1 OF 1	
		A	03030001	HUAWEI TECH CO.,LTD.	

26_GPU_Power_Memory

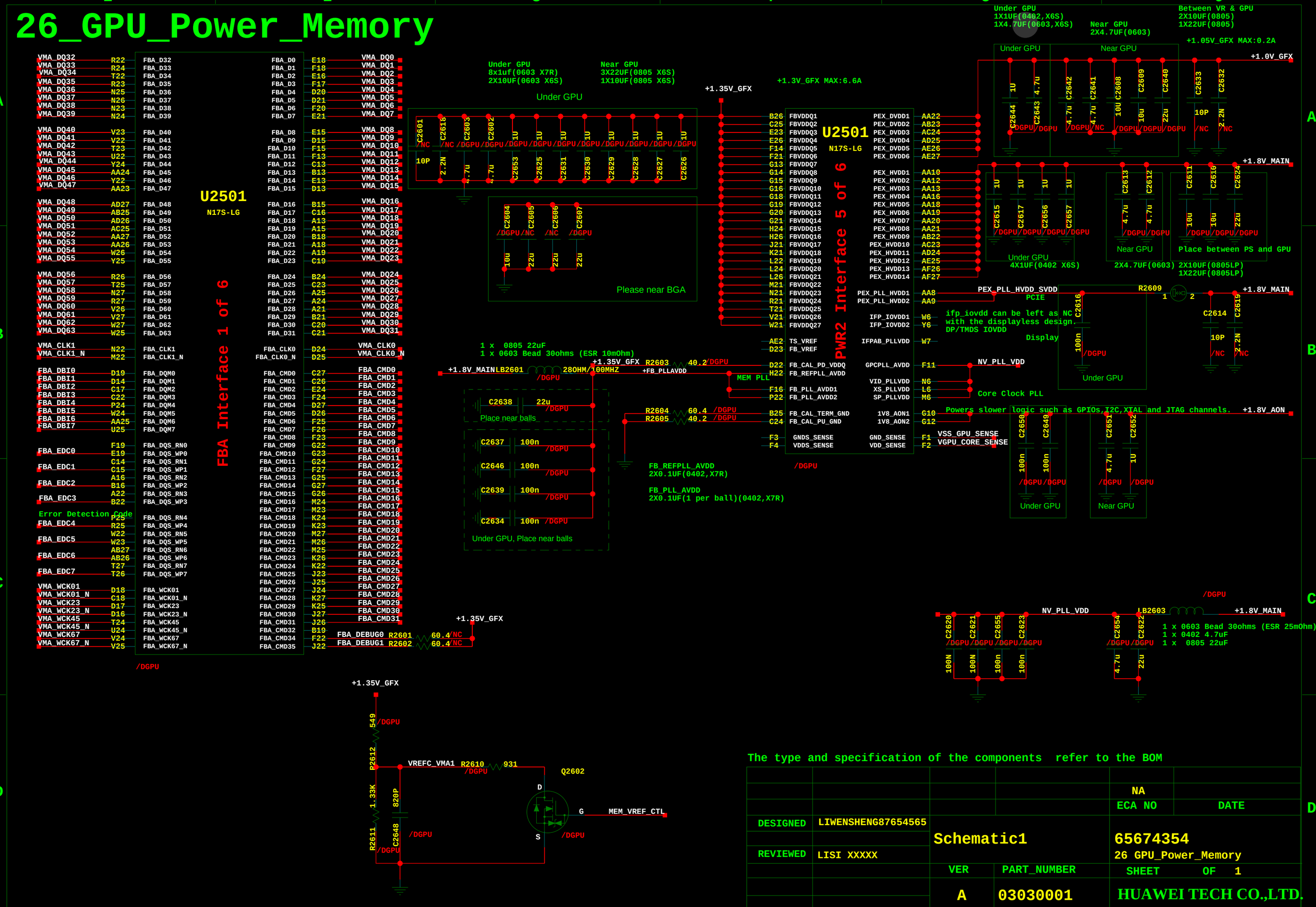

The type and specification of the components refer to the BOM

				NA	
				ECA NO	DATE
DESIGNED	LIWENSHENG87654565	Schematic1		65674354	
REVIEWED	LISI XXXXX			26 GPU_Power_Memory	
		VER	PART_NUMBER	SHEET OF 1	
		A	03030001	HUAWEI TECH CO.,LTD.	

27_GPU_GPIO

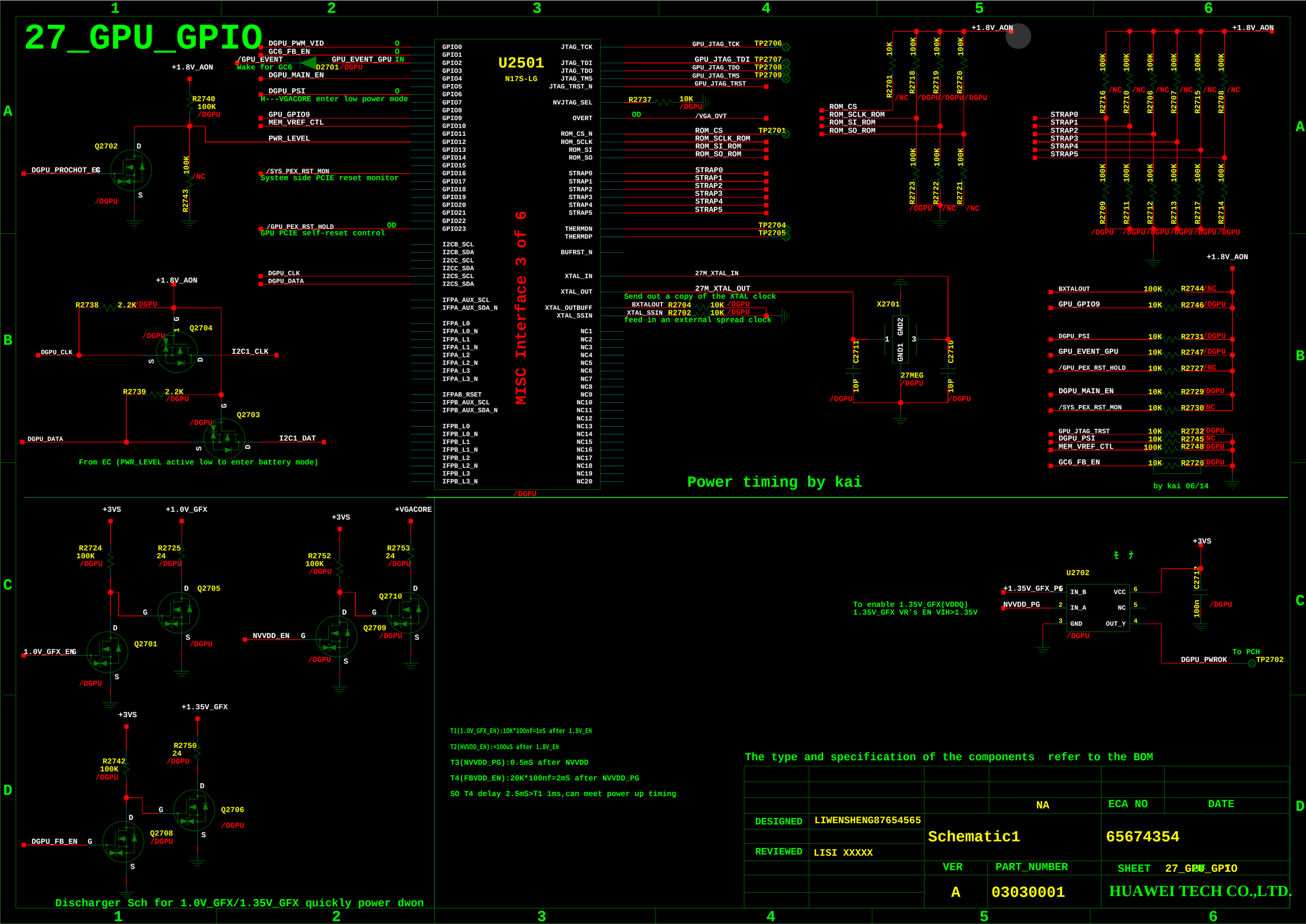
U2501
N17S-LG
MISC Interface 3 of 6
DGPU_PWM_VID
GC6_FB_EN
/GPU_EVENT
GPU_EVENT_GPU
Wake for GC6
D2701/DGPU
DGPU_MAIN_EN
DGPU_PSI
H---VGACORE enter low power mode
GPU_GPIO9
MEM_VREF_CTL
PWR_LEVEL
/SYS_PEX_RST_MON
System side PCIE reset monitor
/GPU_PEX_RST_HOLD
GPU PCIE self-reset control
DGPU_CLK
DGPU_DATA
GPU_JTAG_TCK
GPU_JTAG_TDI
GPU_JTAG_TDO
GPU_JTAG_TMS
GPU_JTAG_TRST
/VGA_OVT
ROM_CS
ROM_SCLK_ROM
ROM_SI_ROM
ROM_SO_ROM
STRAP0
STRAP1
STRAP2
STRAP3
STRAP4
STRAP5
27M_XTAL_IN
27M_XTAL_OUT
Send out a copy of the XTAL clock
BXTALOUT R2704 10K /DGPU
XTAL_SSIN R2702 10K /DGPU
feed in an external spread clock
X2701
27MEG
/DGPU
BXTALOUT 100K R2744/NC
GPU_GPIO9 10K R2746/DGPU
DGPU_PSI 10K R2731/DGPU
GPU_EVENT_GPU 10K R2747/DGPU
/GPU_PEX_RST_HOLD 10K R2727/NC
DGPU_MAIN_EN 10K R2729/DGPU
/SYS_PEX_RST_MON 10K R2730/NC
GPU_JTAG_TRST 10K R2732/DGPU
DGPU_PSI 10K R2745/NC
MEM_VREF_CTL 100K R2748/DGPU
GC6_FB_EN 10K R2726/DGPU
by kai 06/14
Power timing by kai
From EC (PWR_LEVEL active low to enter battery mode)
Discharger Sch for 1.0V_GFX/1.35V_GFX quickly power dwon
To enable 1.35V_GFX(VDDQ)
1.35V_GFX VR's EN VIH>1.35V
U2702
+1.35V_GFX_PG
NVVDD_PG
IN_B
IN_A
GND
VCC
NC
OUT_Y
To PCH
DGPU_PWROK
TP2702
T1(1.0V_GFX_EN):10K*100nf=1mS after 1.8V_EN
T2(NVVDD_EN):<100uS after 1.8V_EN
T3(NVVDD_PG):0.5mS after NVVDD
T4(FBVDD_EN):20K*100nf=2mS after NVVDD_PG
SO T4 delay 2.5mS>T1 1ms,can meet power up timing
The type and specification of the components refer to the BOM
DESIGNED LIWENSHENG87654565
REVIEWED LISI XXXXX
NA
ECA NO
DATE
Schematic1
65674354
VER
PART_NUMBER
SHEET 27_GPU_GPIO
A
03030001
HUAWEI TECH CO.,LTD.

28_GPU_POWER

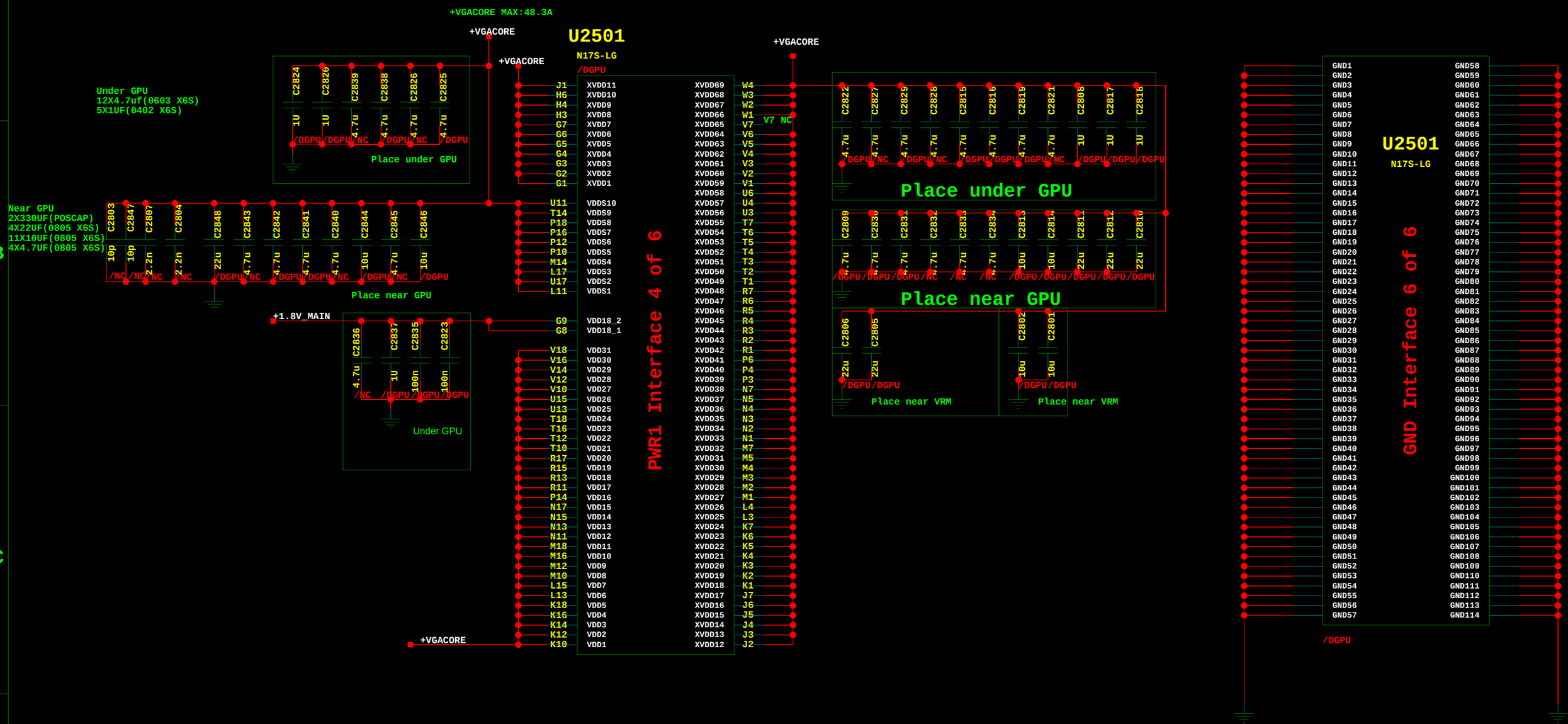

The type and specification of the components refer to the BOM

				NA	
				ECA NO	DATE
DESIGNED	LIWENSHENG87654565	Schematic1		65674354	
REVIEWED	LISI XXXXX				
		VER	PART_NUMBER	SHEET 28_GPU_VCORE	
		A	03030001	HUAWEI TECH CO.,LTD.	

29_GPU_VRAM

Non-mirrored

Mirrored

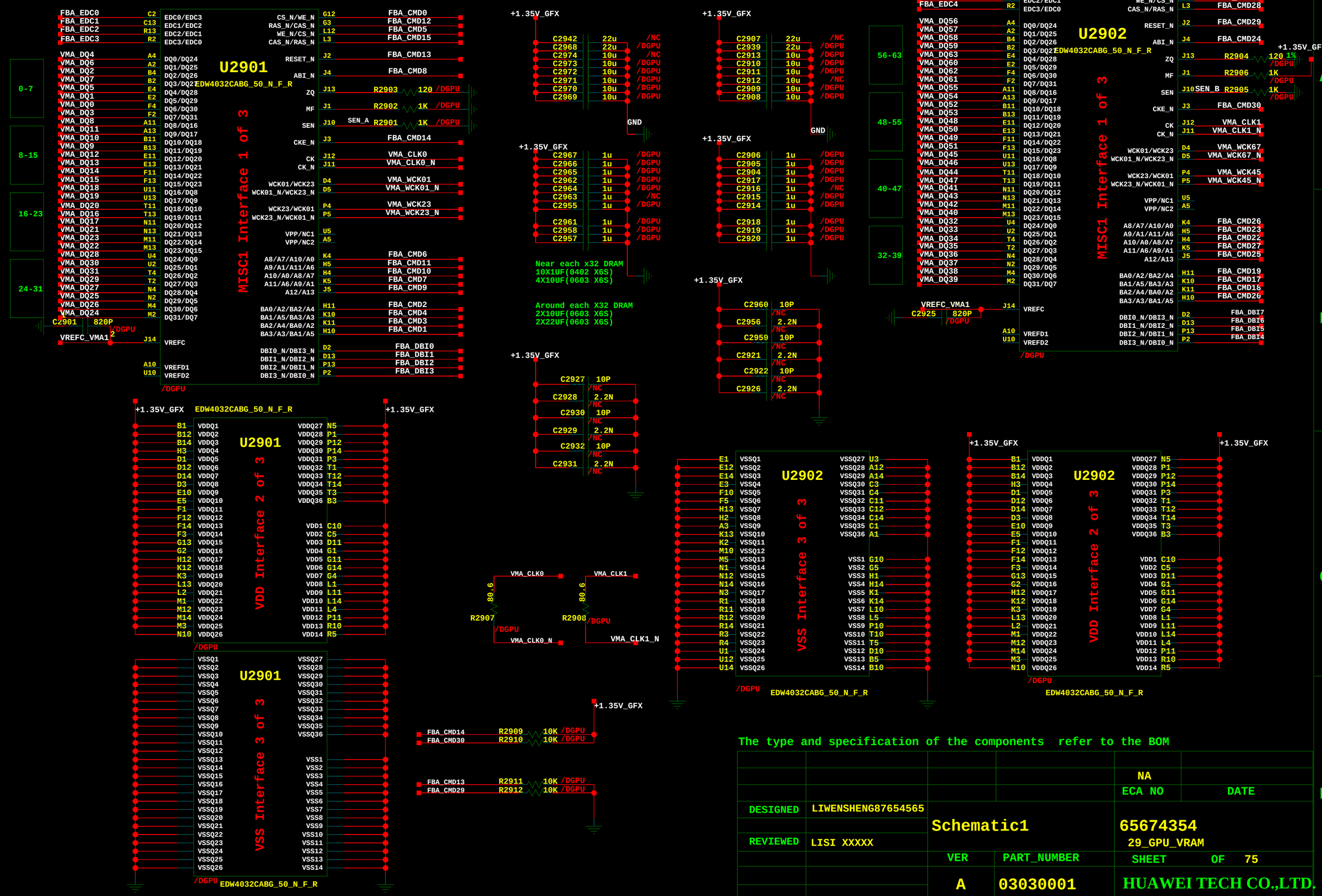

The type and specification of the components refer to the BOM

				NA	
				ECA NO	DATE
DESIGNED	LIWENSHENG87654565	Schematic1		65674354	
REVIEWED	LISI XXXXX			29_GPU_VRAM	
		VER	PART_NUMBER	SHEET	OF 75
		A	03030001	HUAWEI TECH CO.,LTD.	

30_EC_IT8987VG/BX

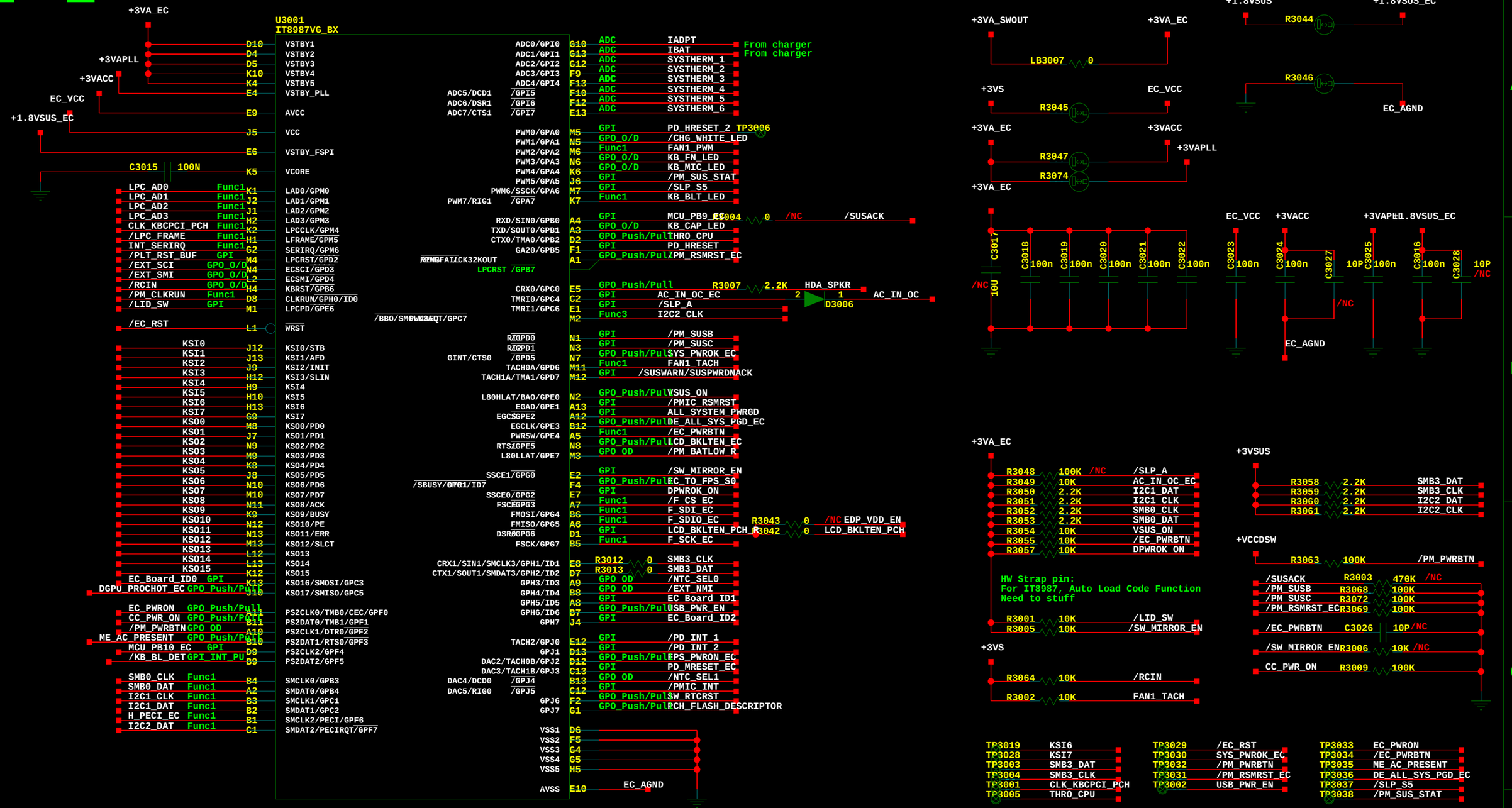

Reserve C3002 for Q3006 may turn on when battery plug in

The type and specification of the components refer to the BOM

				NA	
				ECA NO	DATE
DESIGNED	LIWENSHENG87654565	Watt		65674354	
REVIEWED	LISI XXXXX				
		VER	PART_NUMBER	SHEET 42 OF 21	
		A	03030001	HUAWEI TECH CO.,LTD.	

31_EC_Keyboard/Backlight

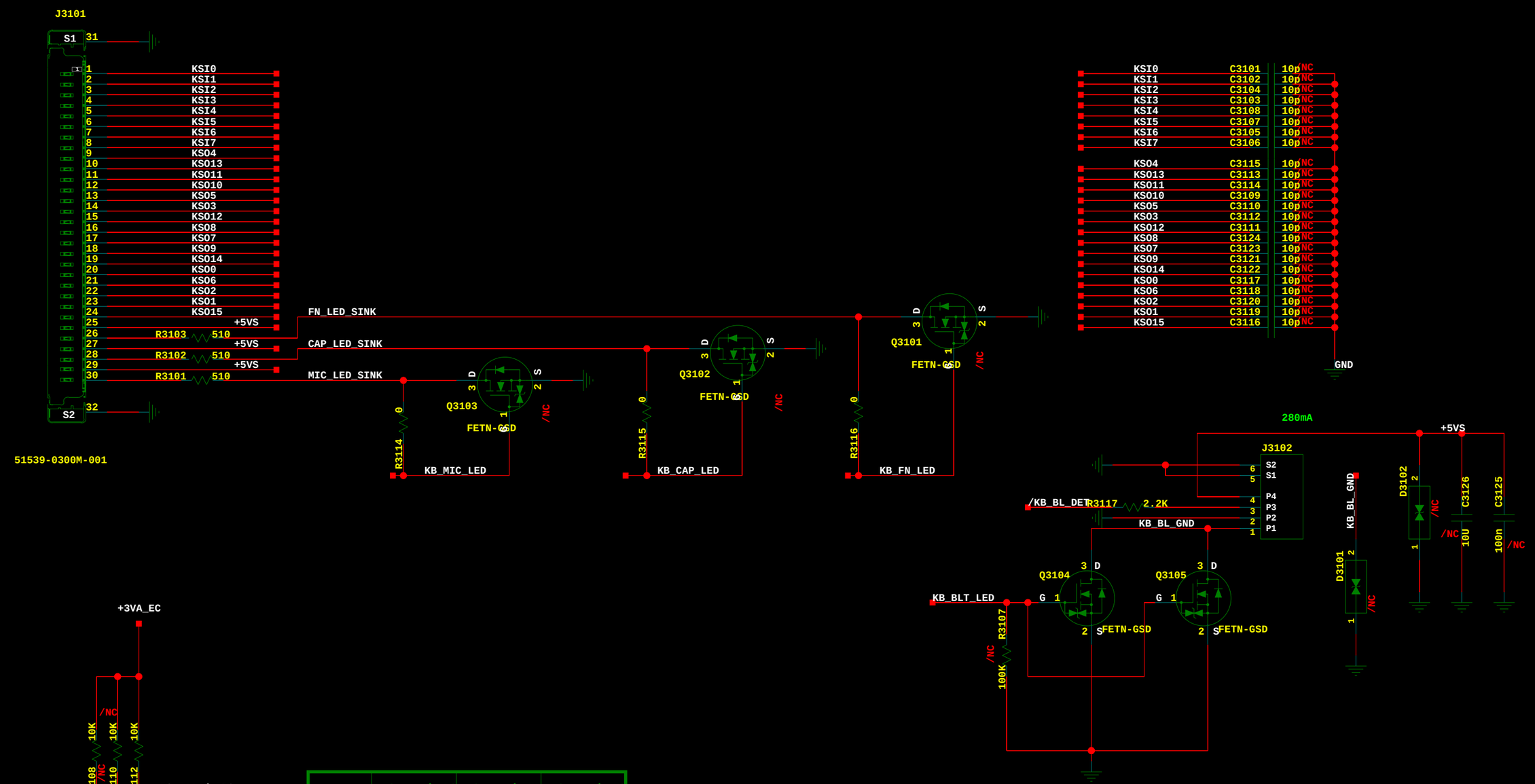

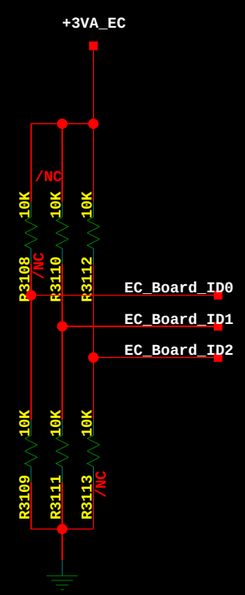

	EC_Board_ID0	EC_Board_ID1	EC_Board_ID2
ÊµÑé°å	0	0	0
A	0	0	1
B	0	1	0
C	0	1	1

The type and specification of the components refer to the BOM

				NA	
				ECA NO	DATE
DESIGNED	LIWENSHENG87654565	Watt		65674354	
REVIEWED	LISI XXXXX				
		VER	PART_NUMBER	SHEET 43 OF 22	
		A	03030001	HUAWEI TECH CO.,LTD.	

32_T_Sense_FAN_CHG_LED

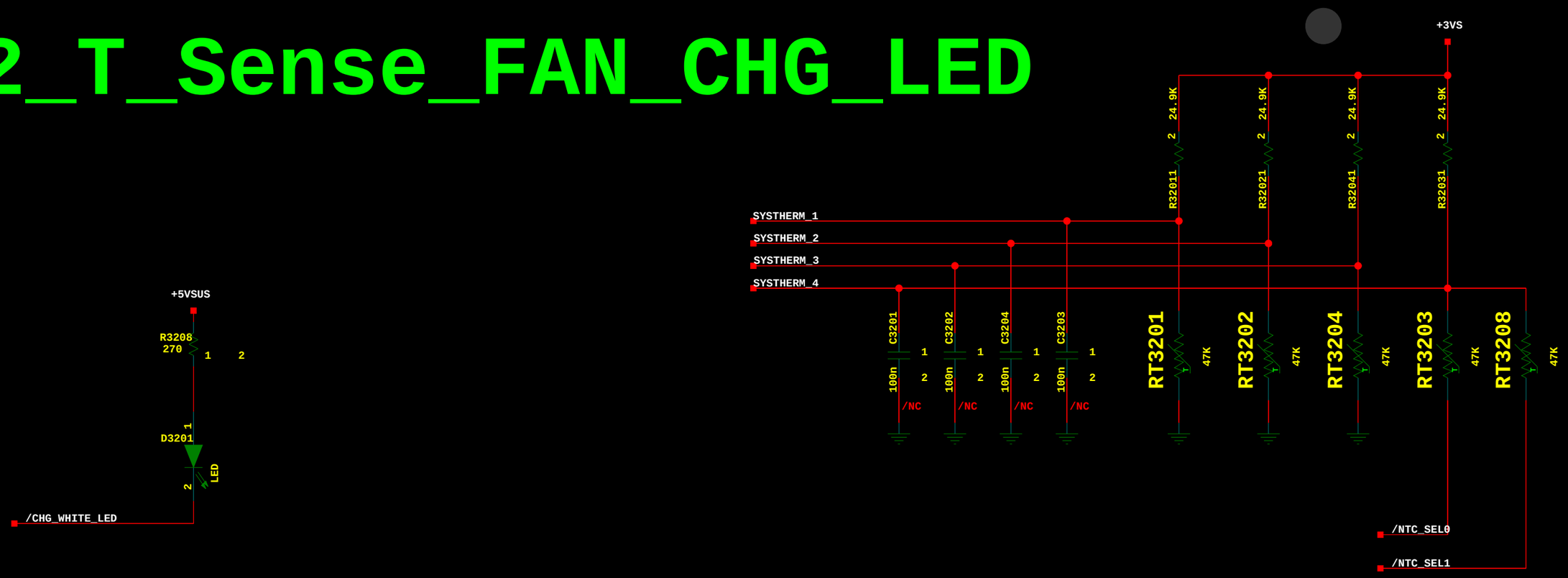

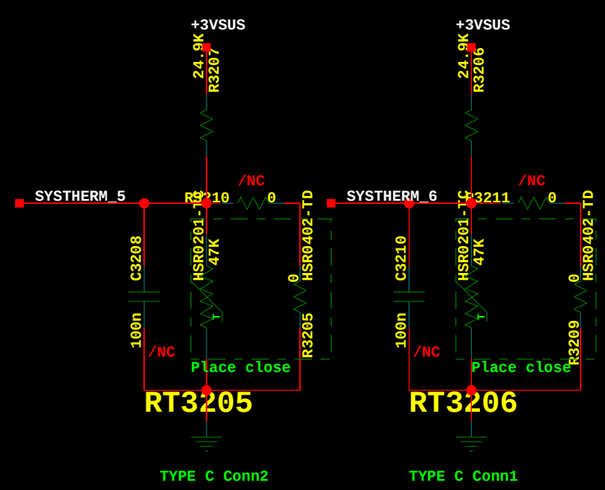

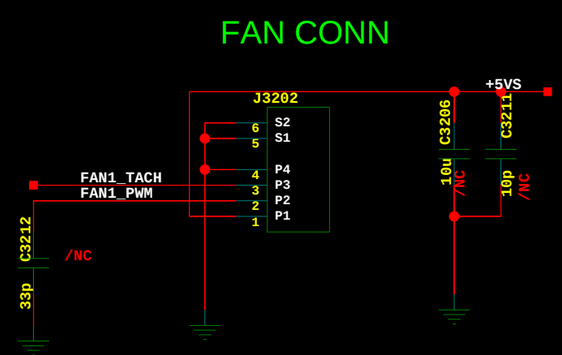

The type and specification of the components refer to the BOM

				NA	
				ECA NO	DATE
DESIGNED	LIWENSHENG87654565				
		Watt		65674354	
REVIEWED	LISI XXXXX				
		VER	PART_NUMBER	SHEET 49 OF 28	
		A	03030001	HUAWEI TECH CO.,LTD.	

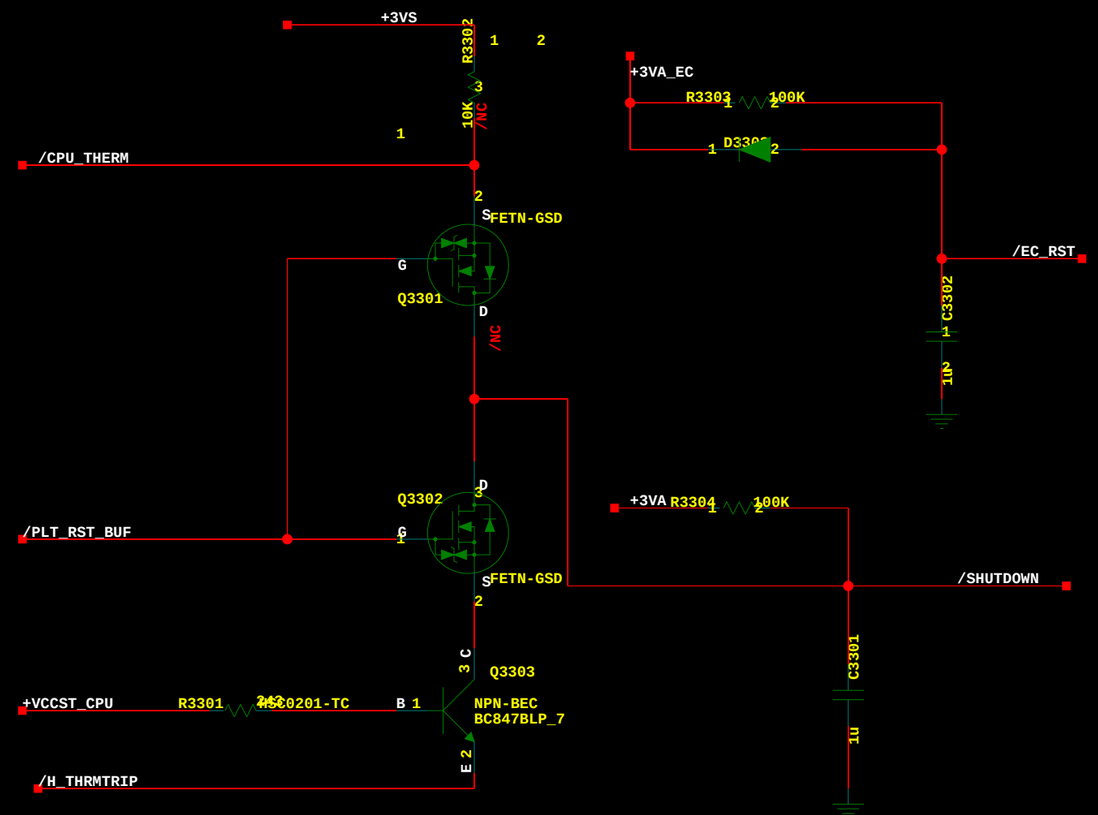

/PLT_RST_BUF	/CPU_THERM	/H_THRMTRIP	/FORCE_OFF	/SHUTDOWN
1	1	1	1	1
0	X	X	1	1
X	X	X	0	0
1	0	X	X	0
1	X	0	X	0

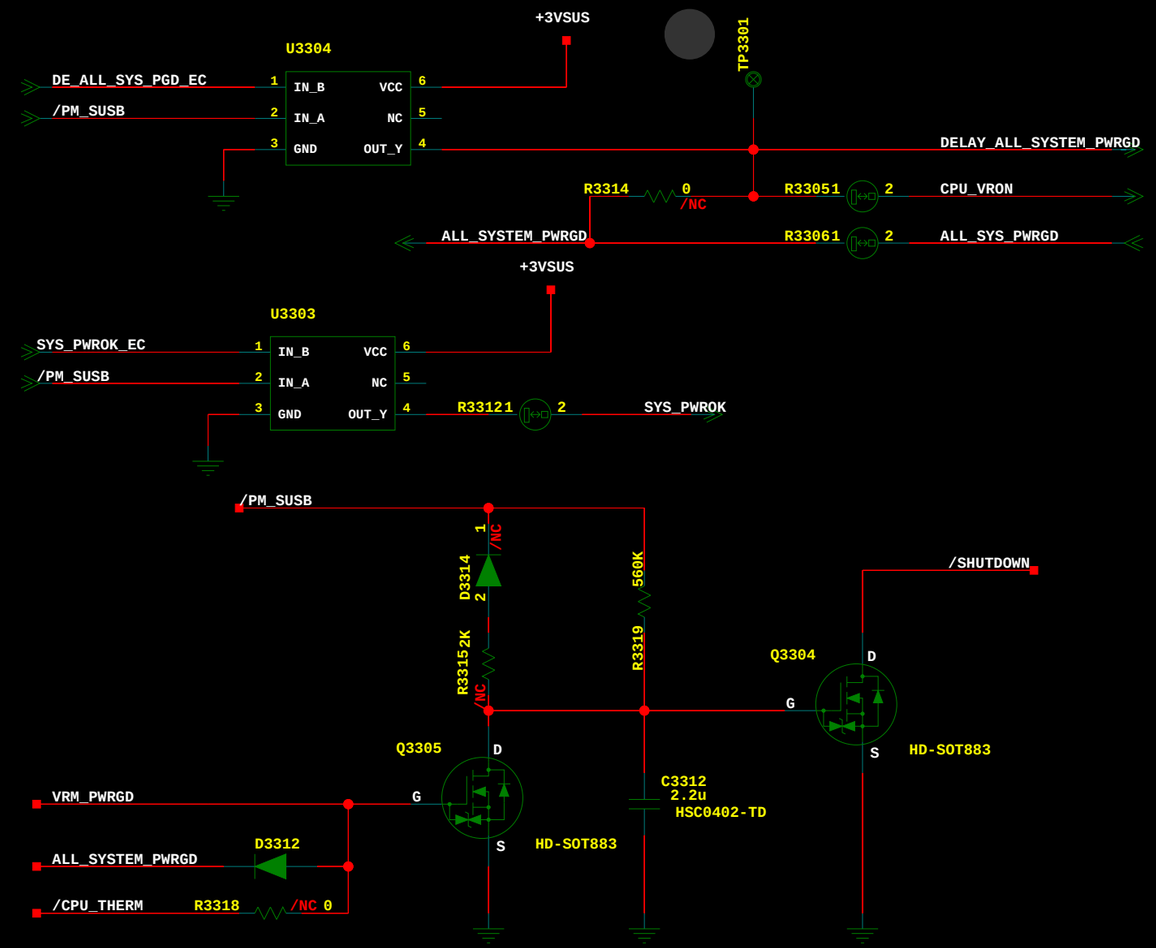

Click Pad

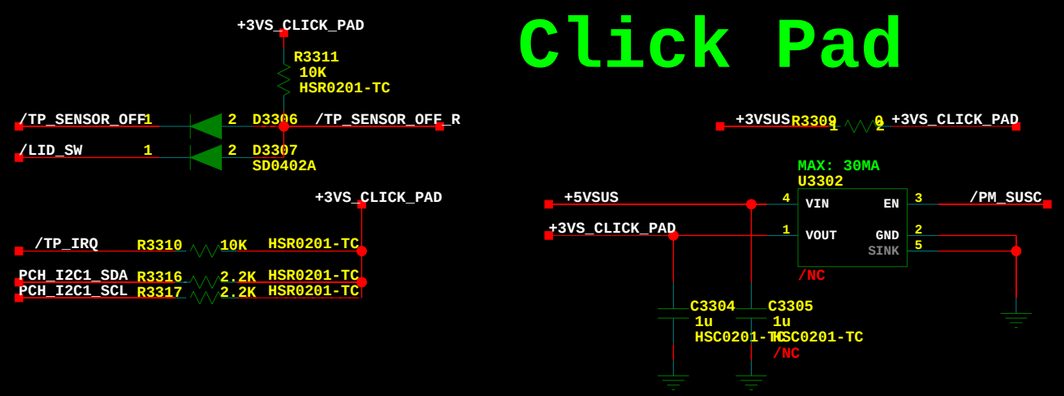

To meet PCH tPCH12 power down sequence.

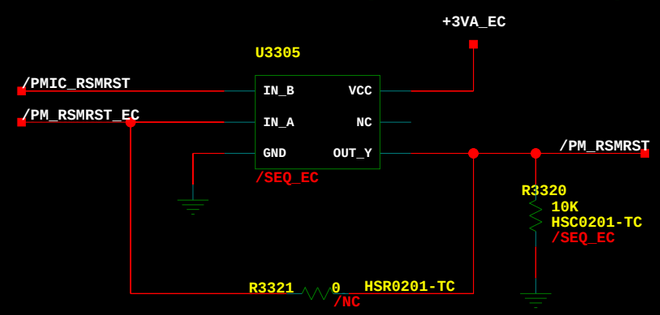

The type and specification of the components refer to the BOM

				NA	
				ECA NO	DATE
DESIGNED	LIWENSHENG87654565	Watt		65674354	
REVIEWED	LISI XXXXX				
		VER	PART_NUMBER	SHEET 44 OF 23	
		A	03030001	HUAWEI TECH CO.,LTD.	

The type and specification of the components refer to the BOM

				NA	
				ECA NO	DATE
DESIGNED	LIWENSHENG87654565	Mach		65674354	
REVIEWED	LISI XXXXX				
		VER	PART_NUMBER	SHEET 99 OF 63	
		A	03030001	HUAWEI TECH CO.,LTD.	

35_Display_ eDP Panel

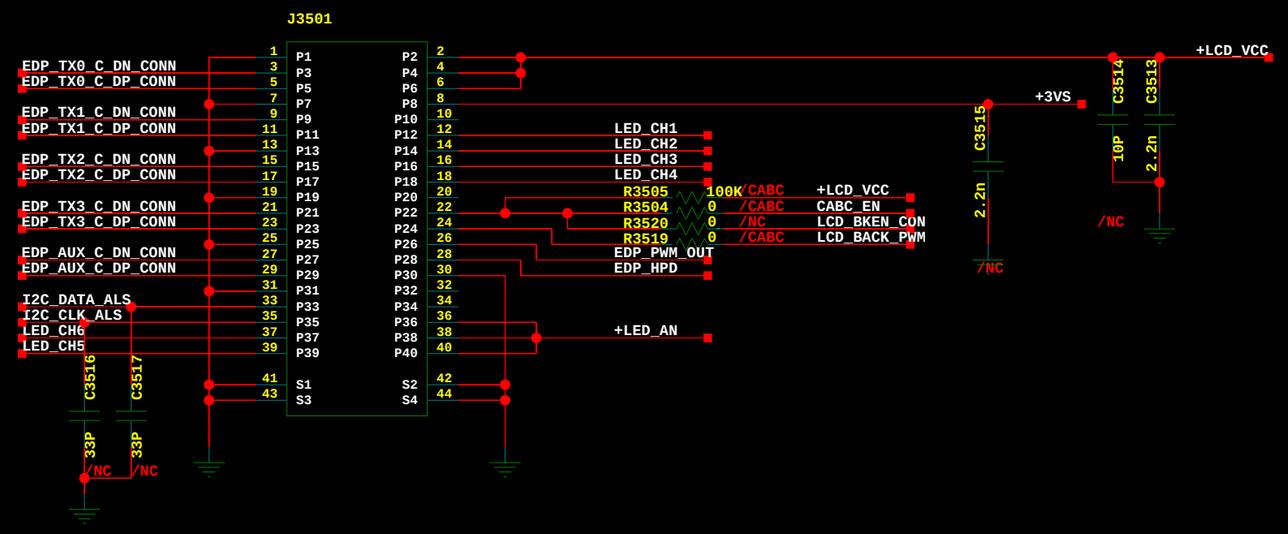

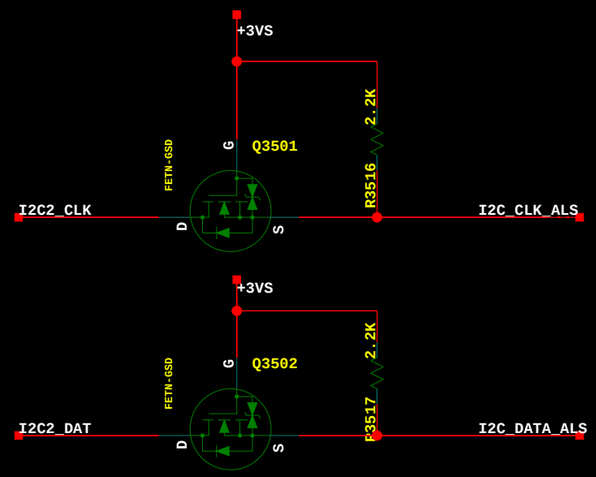

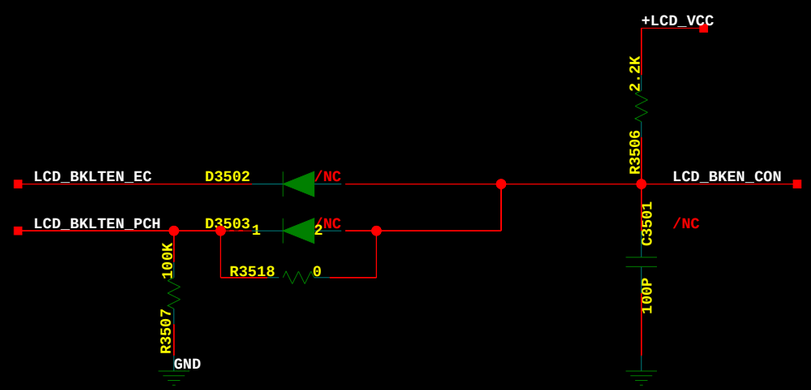

0ohm colayout

Need check to select redriver IC or CMC or resister

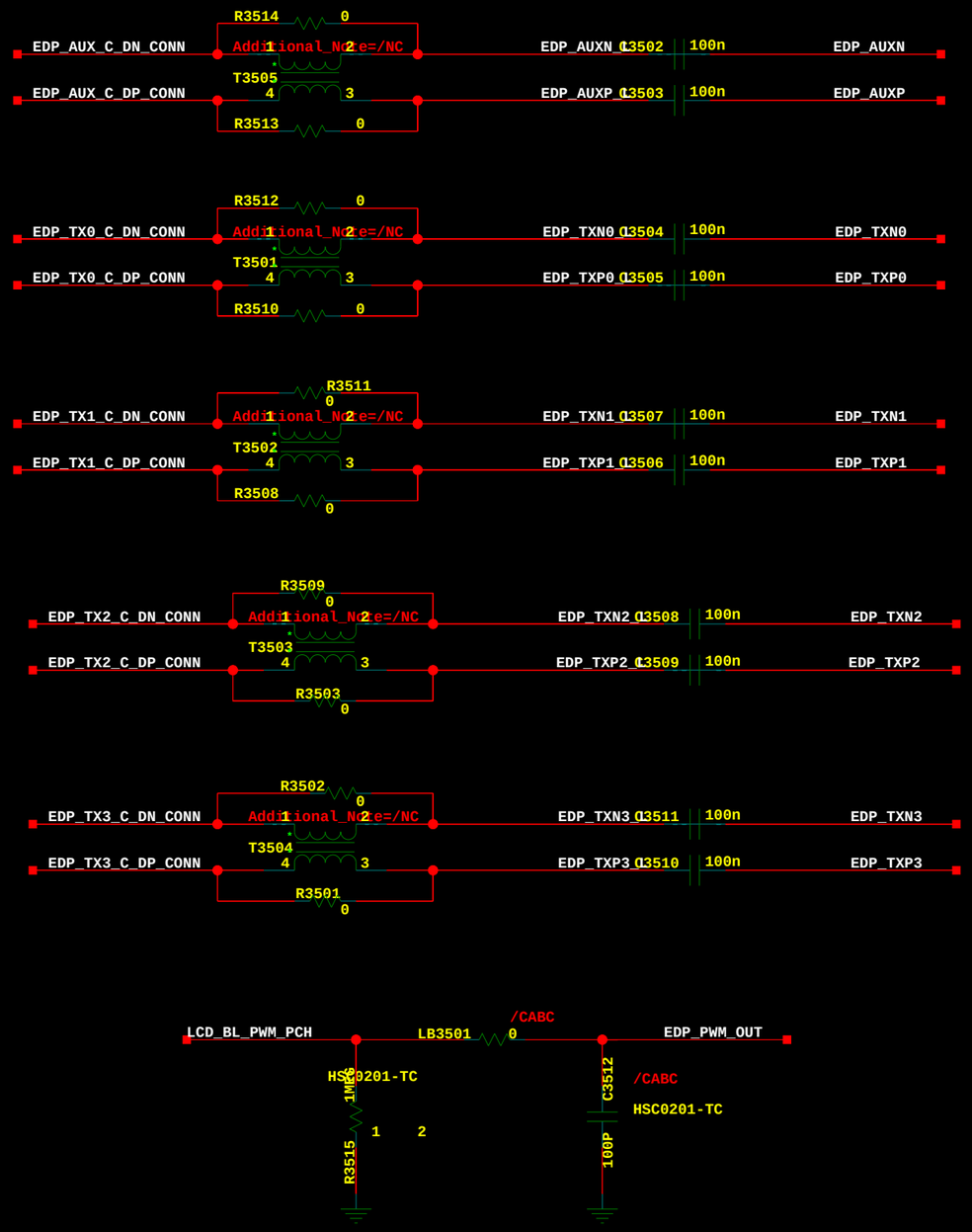

The type and specification of the components refer to the BOM

				NA	
				ECA NO	DATE
DESIGNED	CHENWEI 00267991	Watt		65674354	
REVIEWED	LISI XXXXX				
		VER	PART_NUMBER	SHEET 48 OF 27	
		A	03030001	HUAWEI TECH CO.,LTD.	

36.Touch Panel

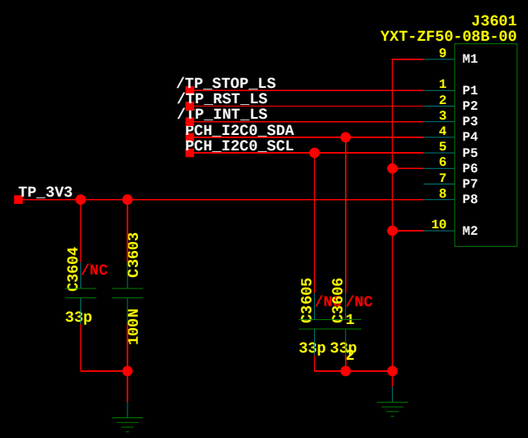

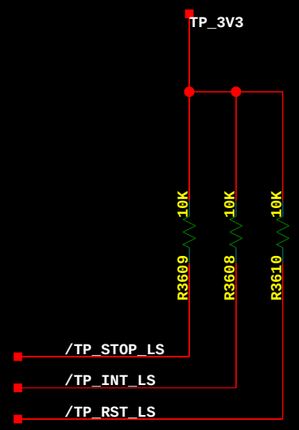

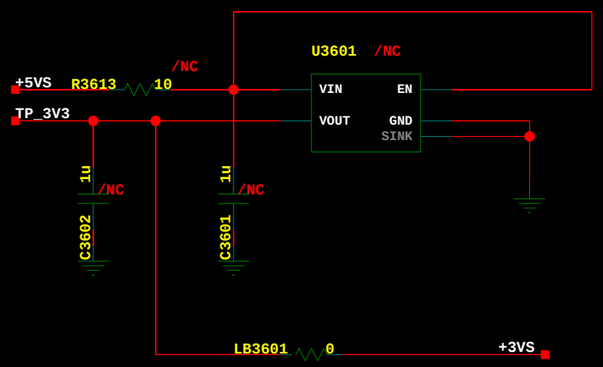

The type and specification of the components refer to the BOM

				NA	
				ECA NO	DATE
DESIGNED	LIWENSHENG87654565	SH0WATTM		65674354	
REVIEWED	LISI XXXXX				
		VER	PART_NUMBER	SHEET 48 OF 48	
		A	03030001	HUAWEI TECH CO.,LTD.	

37_Thunderbolt_DP

Displayport source

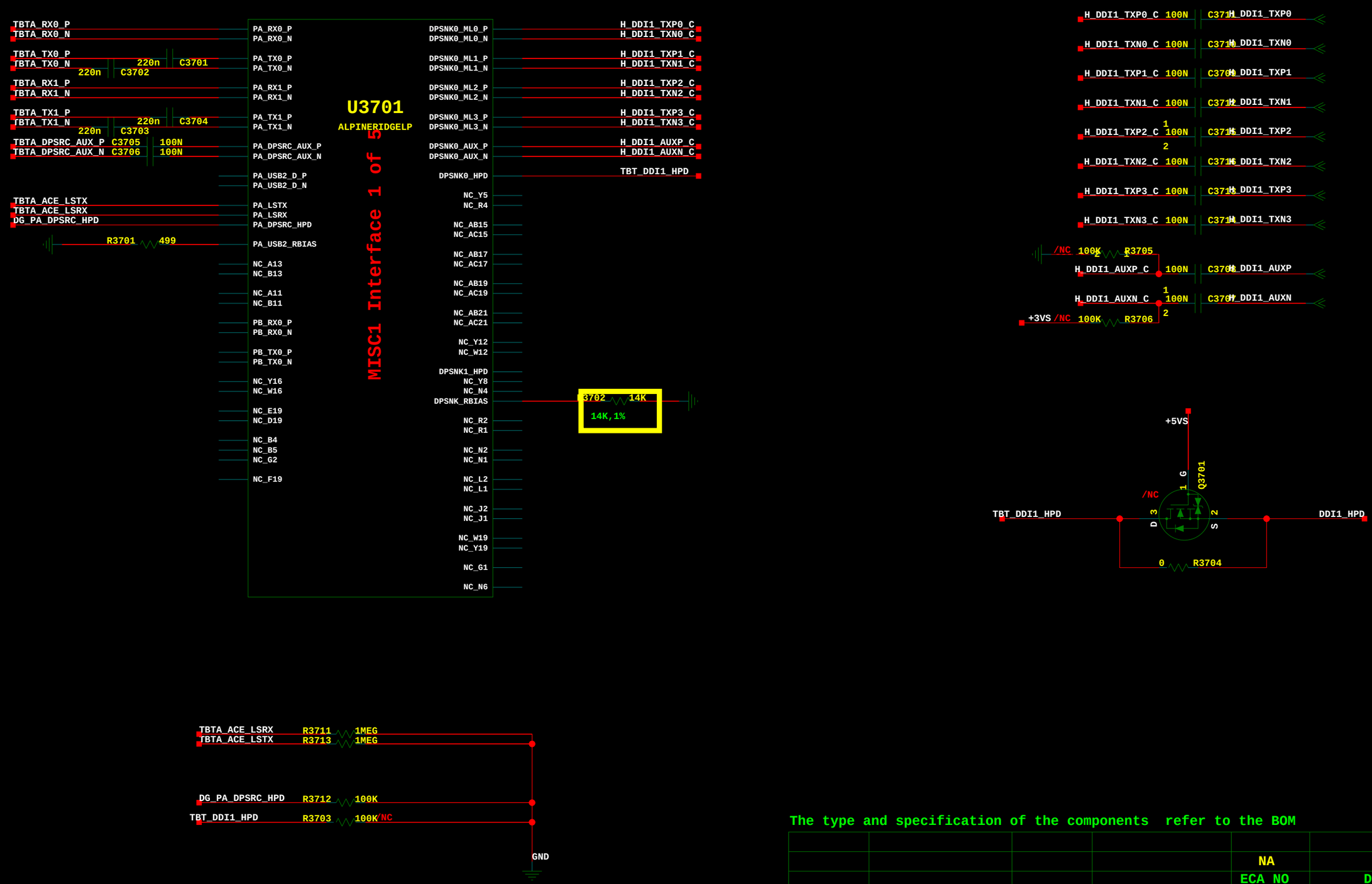

The type and specification of the components refer to the BOM

				NA	
				ECA NO	DATE
DESIGNED	LIWENSHENG87654565	SH0WATTM		65674354	
REVIEWED	LISI XXXXX				
		VER	PART_NUMBER	SHEET 83 OF 83	
		A	03030001	HUAWEI TECH CO.,LTD.	

38-Thunderbolt_PCIE

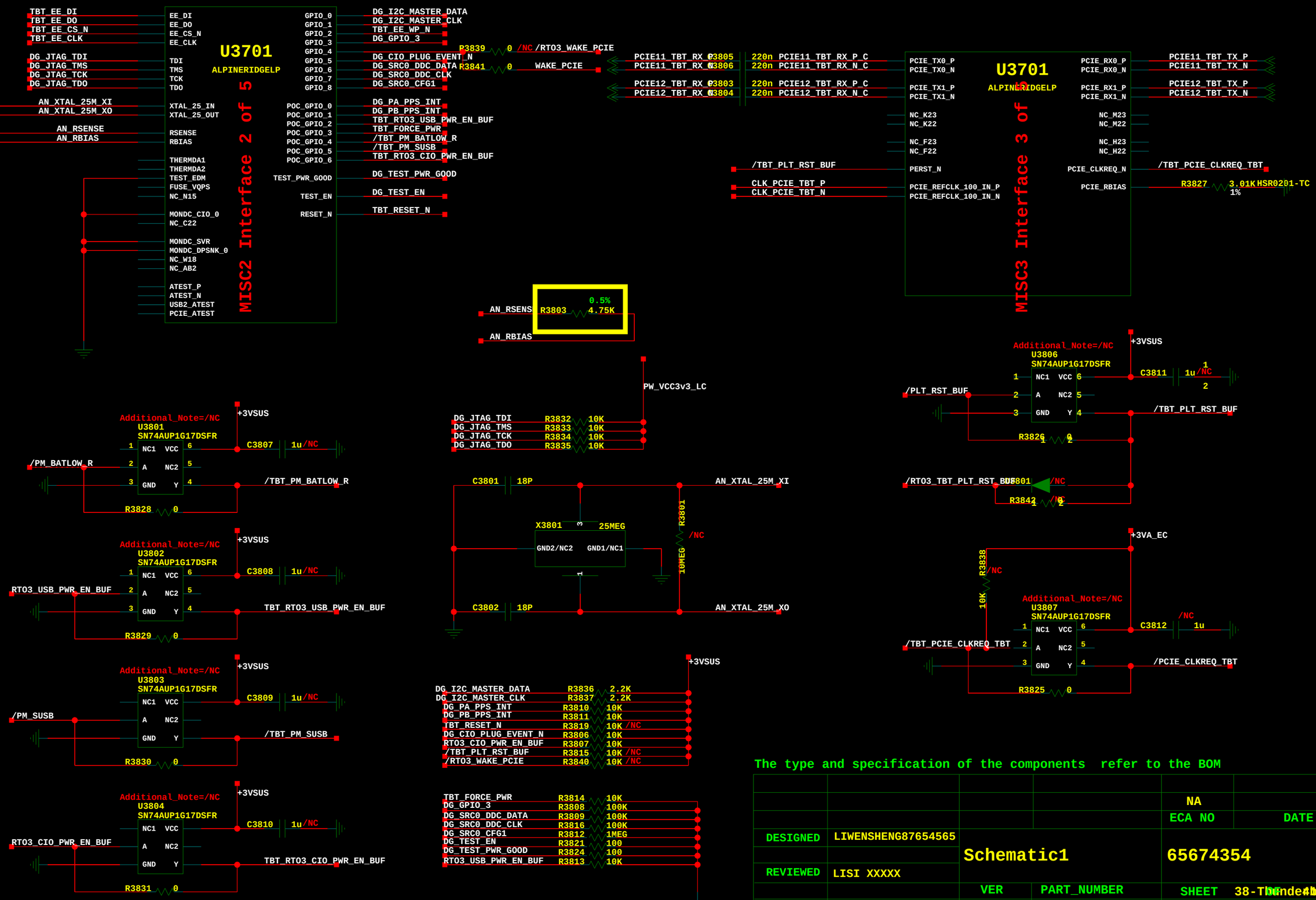

The type and specification of the components refer to the BOM

				NA	
				ECA NO	DATE
DESIGNED	LIWENSHENG87654565	Schematic1		65674354	
REVIEWED	LISI XXXXX				
		VER	PART_NUMBER	SHEET	38-Thunderbolt_PCIE
		A	03030001	HUAWEI TECH CO.,LTD.	

39_Thunderbolt_Power

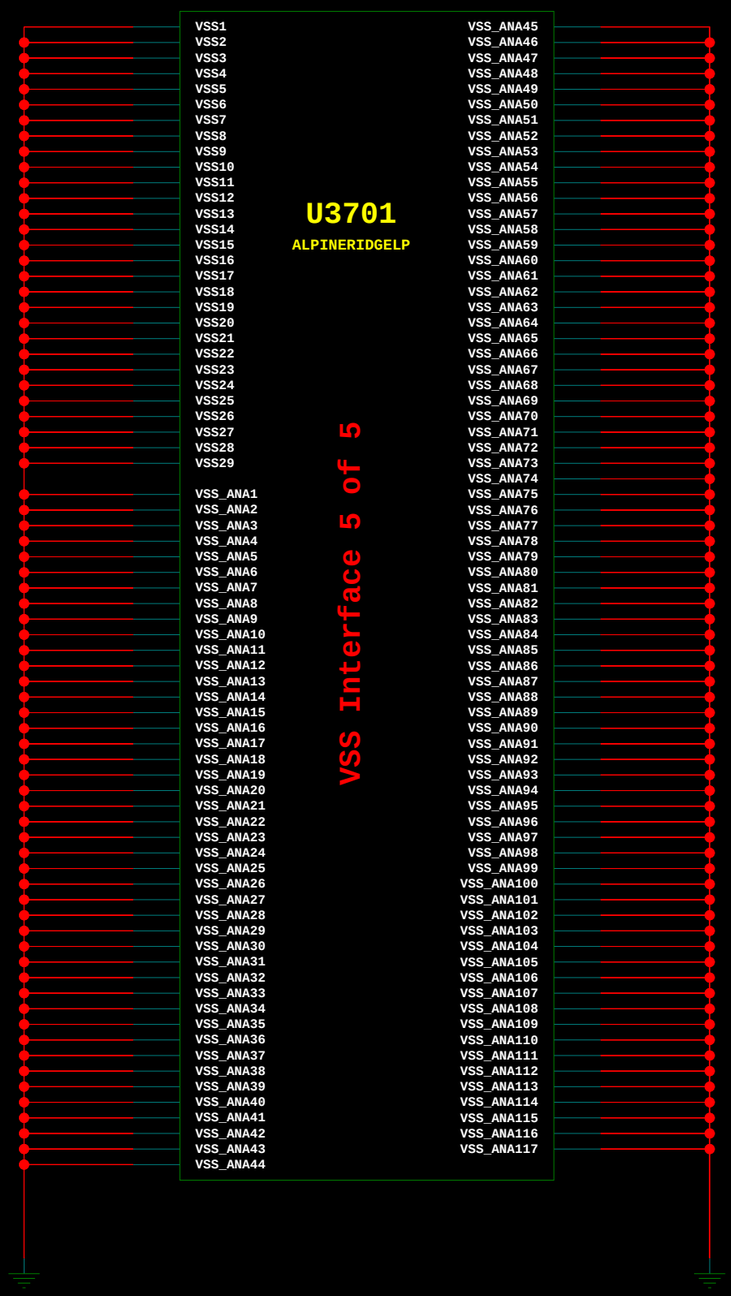

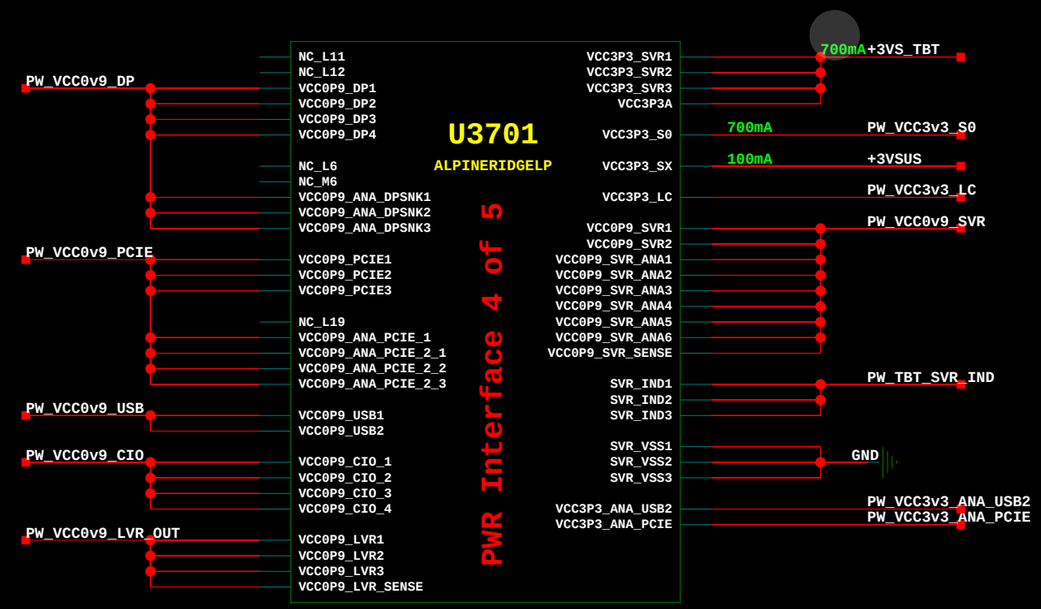

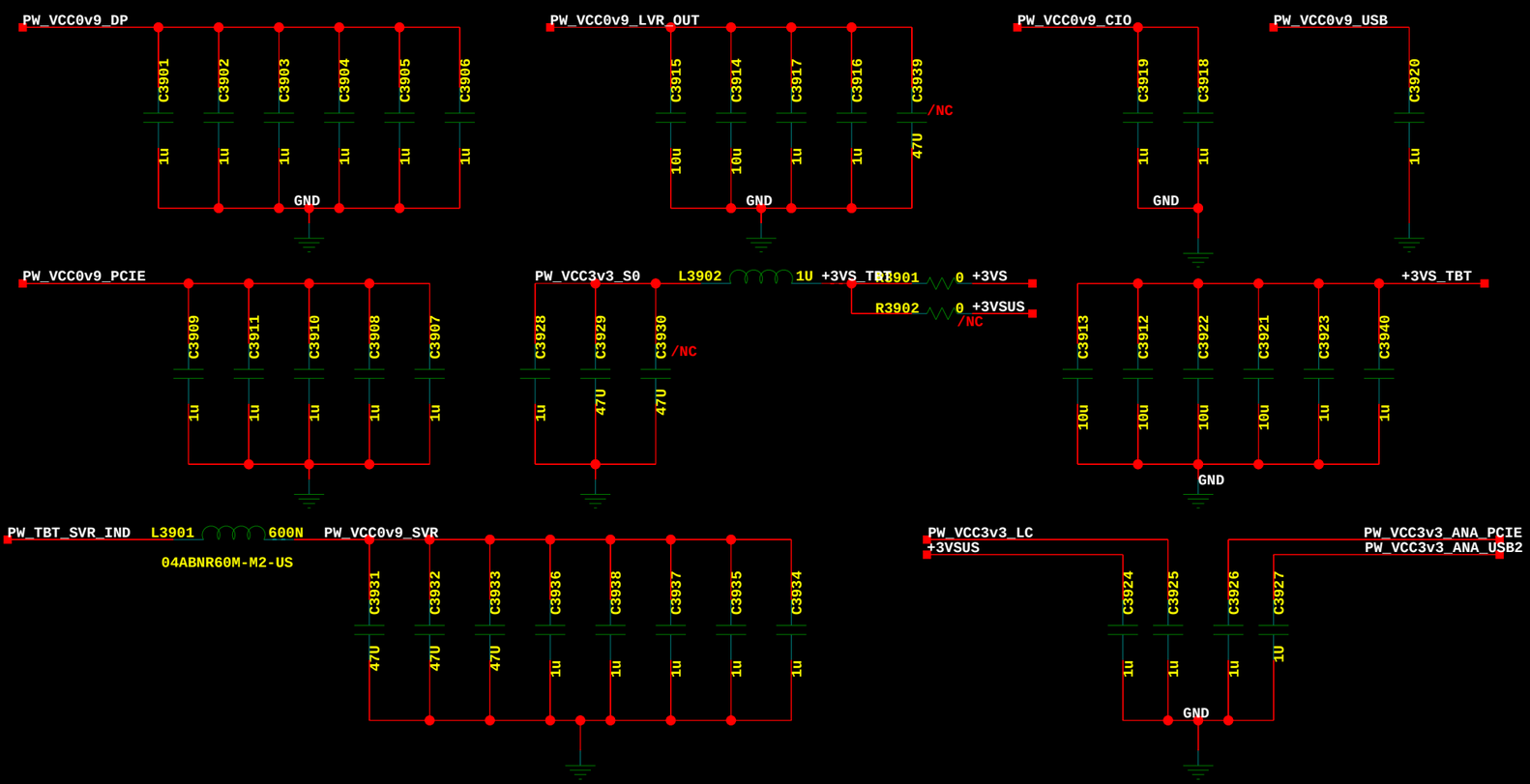

The type and specification of the components refer to the BOM

				NA	
				ECA NO	DATE
DESIGNED	LIWENSHENG87654565	A3TITLEBLOCK		65674354	
REVIEWED	LISI XXXXX				
		VER	PART_NUMBER	SHEET 1 OF 1	
		A	03030001	HUAWEI TECH CO.,LTD.	

24_Audio_ Codec/Jack

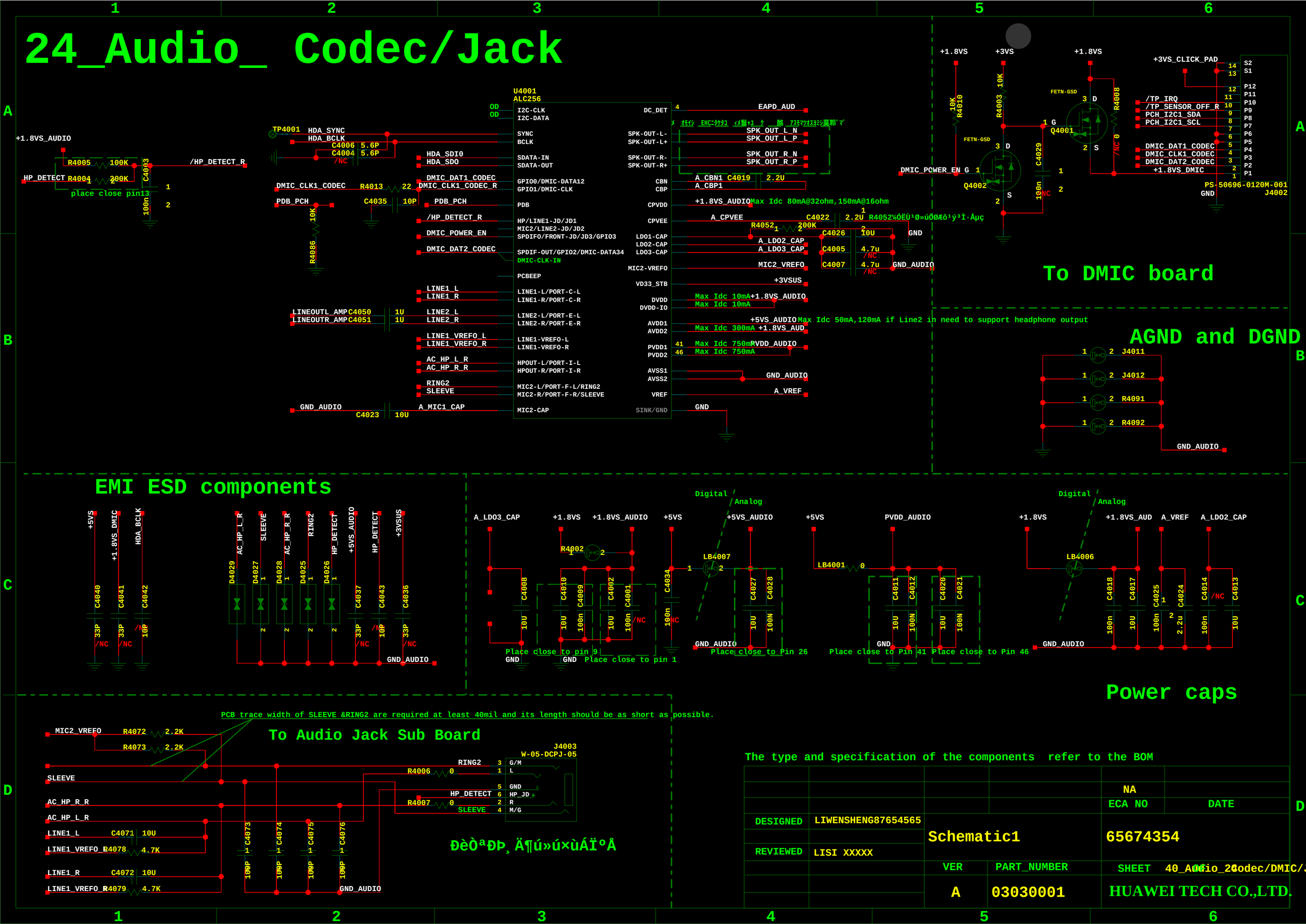

41_Audio_ Codec/DMIC/Jack/Speaker

ｴﾋﾒｳﾃ賽ｪｶﾀﾁ｢ｳ　･ｵﾄAudio Jack FPC｣ｬｱﾜﾃ簇　ﾃ　鋤ﾘｸｴ｣ｬﾇ　ｹﾓﾃｴﾋﾒｳﾃ

To Audio Jack Sub Board

The type and specification of the components refer to the BOM

				NA	
				ECA NO	DATE
DESIGNED	LIWENSHENG87654565	Watt		65674354	
REVIEWED	LISI XXXXX				
		VER	PART_NUMBER	SHEET 46 OF 25	
		A	03030001	HUAWEI TECH CO.,LTD.	

42_AUDIO_CODEC & AMP

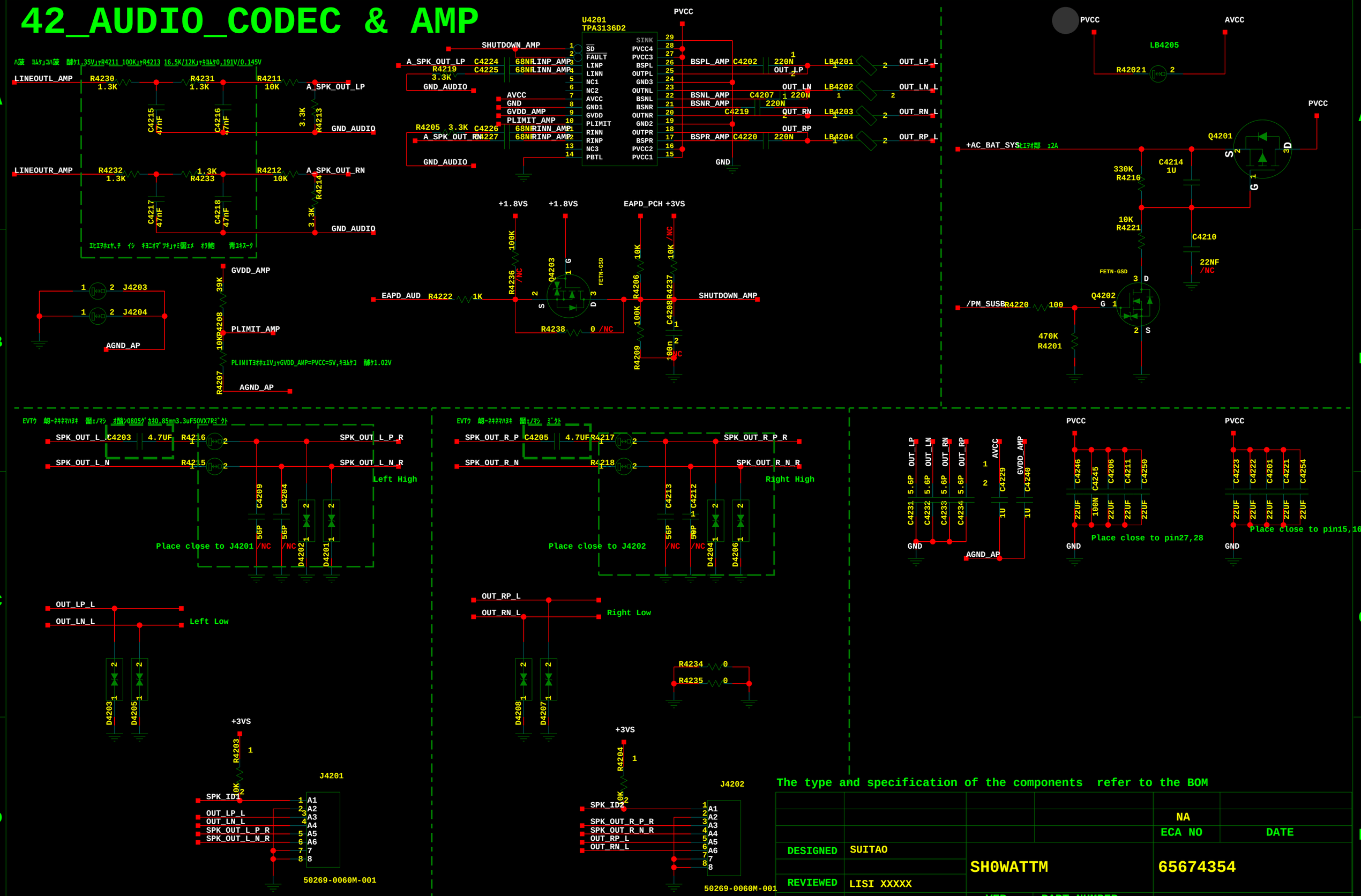

The type and specification of the components refer to the BOM

				NA	
				ECA NO	DATE
DESIGNED	SUITAO	SH0WATTM		65674354	
REVIEWED	LISI XXXXX				
		VER	PART_NUMBER	SHEET 39 OF 39	
		A	03030001	HUAWEI TECH CO.,LTD.	

43_AUDIO DMIC

该文档是极速PDF编辑器生成,

The type and specification of the components refer to the BOM

				NA	
				ECA NO	DATE
DESIGNED	LIWENSHENG87654565	SH0WATTM		65674354	
REVIEWED	LISI XXXXX				
		VER	PART_NUMBER	SHEET 46 OF 46	
		A	03030001	HUAWEI TECH CO.,LTD.	

44_Audio DMIC

The type and specification of the components refer to the BOM

				NA	
				ECA NO	DATE
DESIGNED	LIWENSHENG87654565	Mach		65674354	
REVIEWED	LISI XXXXX				
		VER	PART_NUMBER	SHEET 102 OF 66	
		A	03030001	HUAWEI TECH CO.,LTD.	

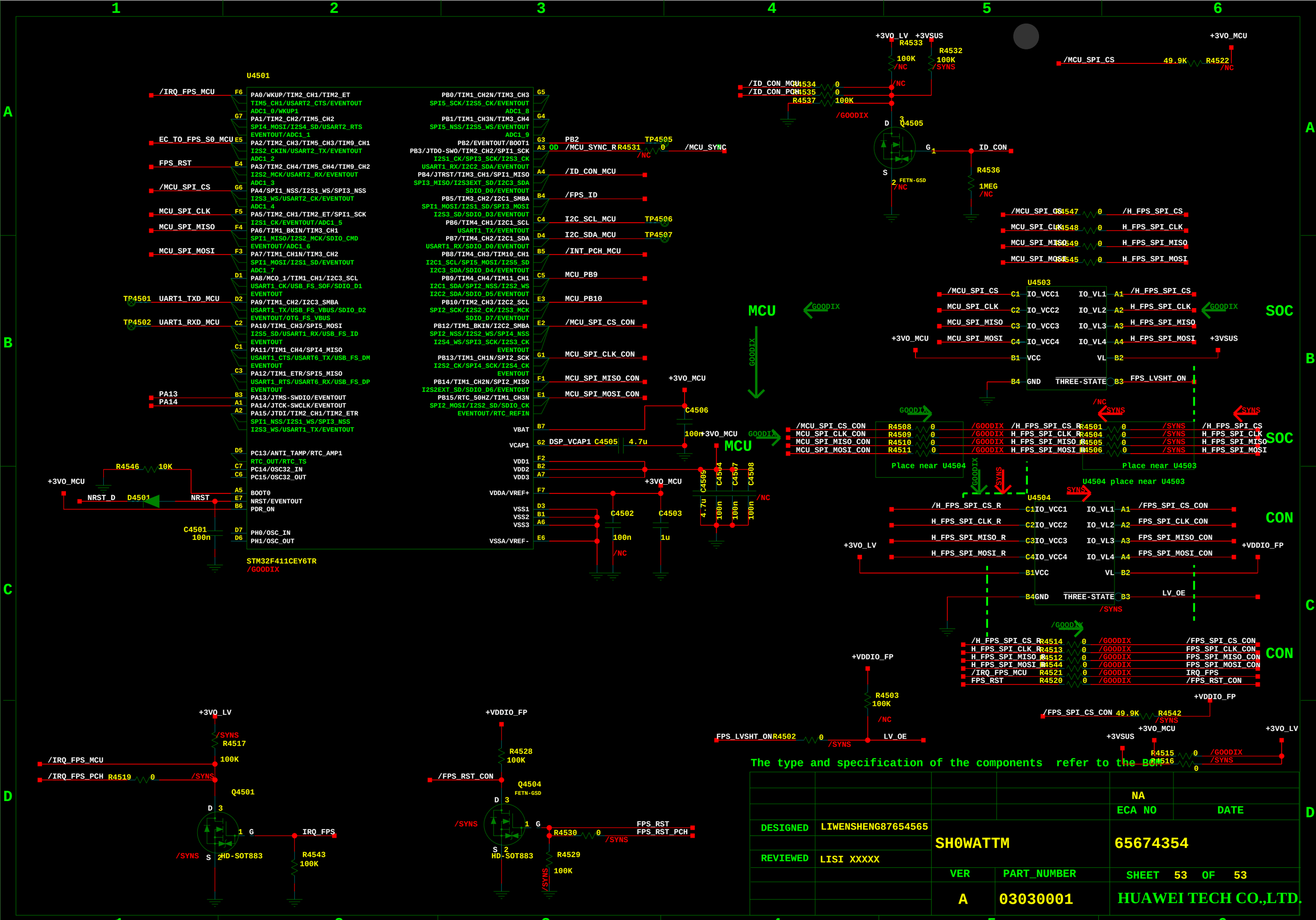
U4501
STM32F411CEY6TR
/GOODIX
MCU
SOC
CON
U4503
U4504
Q4505
Q4501
Q4504
HD-SOT883
FETN-GSD
Place near U4504
Place near U4503
U4504 place near U4503
The type and specification of the components refer to the BOM
NA
ECA NO
DATE
DESIGNED
LIWENSHENG87654565
REVIEWED
LISI XXXXX
SH0WATTM
65674354
VER
PART_NUMBER
A
03030001
SHEET 53 OF 53
HUAWEI TECH CO.,LTD.

46.Finger Sensor CON

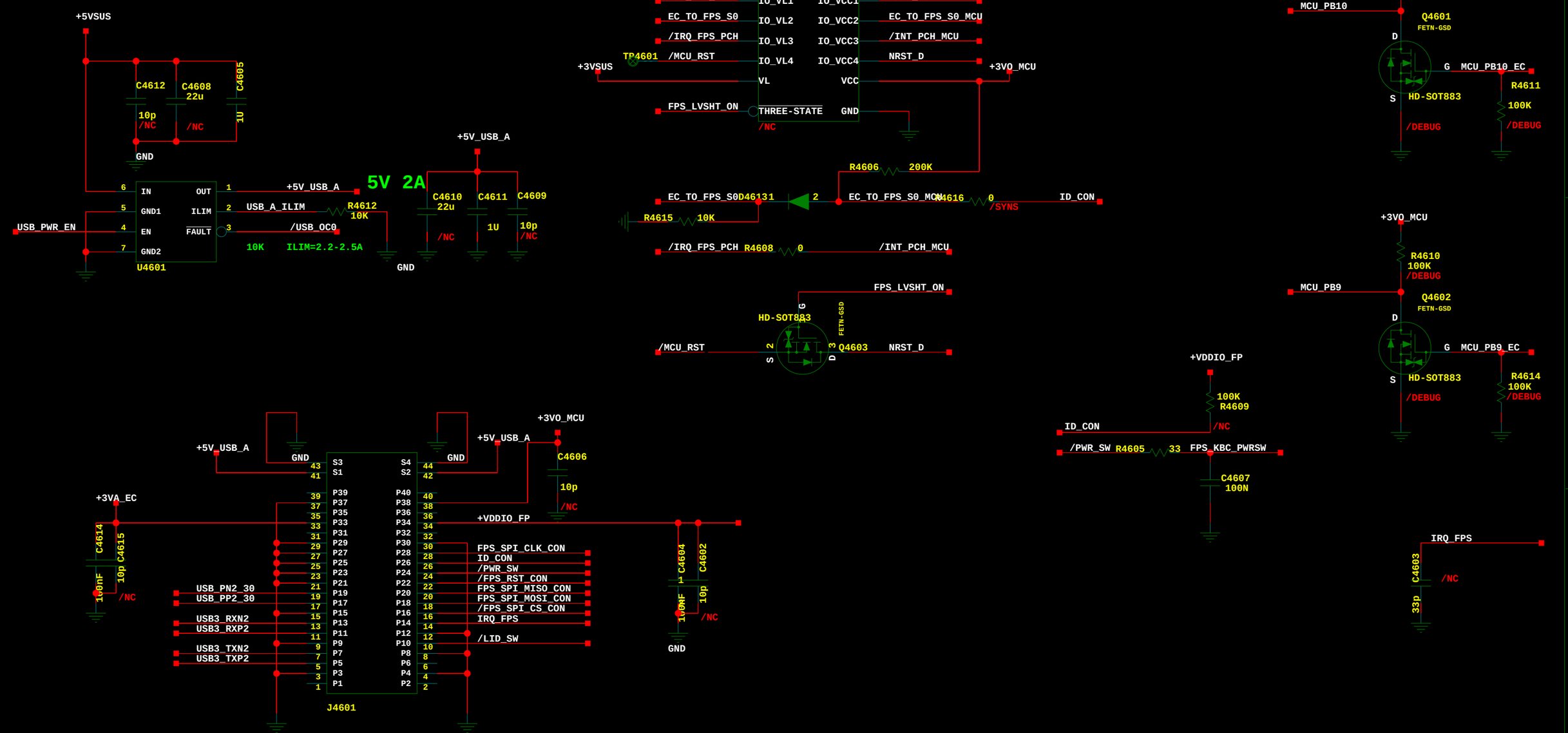

The type and specification of the components refer to the BOM

				NA	
				ECA NO	DATE
DESIGNED	LIWENSHENG87654565	SH0WATTM		65674354	
REVIEWED	LISI XXXXX				
		VER	PART_NUMBER	SHEET 54 OF 54	
		A	03030001	HUAWEI TECH CO.,LTD.	

47_BLANK

The type and specification of the components refer to the BOM

				NA	
				ECA NO	DATE
DESIGNED	LIWENSHENG87654565	Mach		65674354	
REVIEWED	LISI XXXXX				
		VER	PART_NUMBER	SHEET 104 OF 68	
		A	03030001	HUAWEI TECH CO.,LTD.	

48:WIFI_BT_1

Chain A

PW_AN_1V8_DC2DC

1u 1u 100n 100n
C4809 C4810 C4811 C4808
GND

+3VS_WLAN

U4801

VDD1V8_WIFI_TXHB_PA_CHA
VDD1V8_WIFI_TXHB_MX_CHA
VDD1V8_WIFI_RXHB_CHA
VDD1V8_WIFI_TXLB_PA_CHA
VDD1V8_WIFI_TXLB_MX_CHA
VDD1V8_WIFI_RXLB_CHA
VDD1V8_WIFI_TX_LOD_CHA
VDD1V8_WIFI_RX_LOD_CHA
VDD1V8_WIFI_DAC_ANA_CHA
VDD1V8_WIFI_ADC_CHA
VDD1V8_WIFI_MISC_CHA
VDD_VBAT_LDO_VBAT_CHA

GND

VSS_WIFI_TXHB_PA_CHA1
VSS_WIFI_TXHB_PA_CHA2
VSS_WIFI_TXHB_PA_CHA3
VSS_WIFI_TXHB_MX_CHA
VSS_WIFI_RXHB_CHA
VSS_WIFI_TXLB_PA_CHA1
VSS_WIFI_TXLB_PA_CHA2
VSS_WIFI_TXLB_PA_CHA3
VSS_WIFI_TXLB_PA_CHA4
VSS_WIFI_TXLB_MX_CHA
VSS_WIFI_RXLB_CHA
VSS_WIFI_TX_LOD_CHA
VSS_WIFI_RX_LOD_CHA
VSS_WIFI_DAC_ANA_CHA
VSS_WIFI_ADC_CHA
VSS_WIFI_MISC_CHA

MISC2 Interface 2 of 4

WIFI_HB_RF_CHA_N — DIFF50_HB_CHA_N
WIFI_HB_RF_CHA_P — DIFF50_HB_CHA_P
WIFI_LB_RF_CHA_N — DIFF50_LB_CHA_N
WIFI_LB_RF_CHA_P — DIFF50_LB_CHA_P
WIFI_RXHB_RF_CHA_N
WIFI_RXHB_RF_CHA_P
WIFI_ADC_ANATST_CLK_CHA
WIFI_AUX_ADC_EPA_VDET_CHA
VSS_ESD_SHORT_CHA1
VSS_ESD_SHORT_CHA2
VSS_ESD_SHORT_CHA3
VSS_ESD_SHORT_CHA4

C4809 connect to pin A13
C4810 connect to pin D16
C4811 connect to pin D15,E15,E13,E12,B15
C4808 connect to pin B14,C12,D11,C10

Chain B

PW_AN_1V8_DC2DC

1u 1u 15p 2.4p
C4805 C4804 C4803 C4806

+3VS_WLAN

C4802 connect to pin A4
C4804connect to pin D1
4806connect to pin C7,D6,C5,B3
C4803 connect to pin B5,D2,E2,E4,E5

U4801

VDD1V8_WIFI_TXHB_PA_CHB
VDD1V8_WIFI_TXHB_MX_CHB
VDD1V8_WIFI_RXHB_CHB
VDD1V8_WIFI_TXLB_PA_CHB
VDD1V8_WIFI_TXLB_MX_CHB
VDD1V8_WIFI_RXLB_CHB
VDD1V8_WIFI_TX_LOD_CHB
VDD1V8_WIFI_RX_LOD_CHB
VDD1V8_WIFI_DAC_ANA_CHB
VDD1V8_WIFI_ADC_CHB
VDD1V8_WIFI_MISC_CHB
VDD_VBAT_LDO_VBAT_CHB1
VDD_VBAT_LDO_VBAT_CHB2

VSS_WIFI_TXHB_PA_CHB1
VSS_WIFI_TXHB_PA_CHB2
VSS_WIFI_TXHB_PA_CHB3
VSS_WIFI_TXHB_MX_CHB
VSS_WIFI_RXHB_CHB
VSS_WIFI_TXLB_PA_CHB1
VSS_WIFI_TXLB_PA_CHB2
VSS_WIFI_TXLB_PA_CHB3
VSS_WIFI_TXLB_PA_CHB4
VSS_WIFI_TXLB_MX_CHB
VSS_WIFI_RXLB_CHB
VSS_WIFI_TX_LOD_CHB
VSS_WIFI_RX_LOD_CHB
VSS_WIFI_DAC_ANA_CHB
VSS_WIFI_ADC_CHB
VSS_WIFI_MISC_CHB

MISC3 Interface 3 of 4

WIFI_HB_RF_CHB_N — DIFF50_HB_CHB_N
WIFI_HB_RF_CHB_P — DIFF50_HB_CHB_P
WIFI_LB_BT_RF_CHB_N — DIFF50_LB_CHB_N
WIFI_LB_BT_RF_CHB_P — DIFF50_LB_CHB_P
WIFI_RXHB_RF_CHB_N
WIFI_RXHB_RF_CHB_P
WIFI_ADC_ANATST_CLK_CHB
WIFI_AUX_ADC_EPA_VDET_CHB
FE_V_MODE
FE_CHA_0
FE_CHA_1
FE_CHA_2
FE_CHB_0
FE_CHB_1
FE_CHB_2
VDD1V8_WIFI_SYNT_DPLL_CORE
VSS_WIFI_SYNT_DPLL_VCO
VSS_WIFI_SYNT_DPLL_RING
VSS_MISC_SHR
VSS_ESD_SHORT_CHB1
VSS_ESD_SHORT_CHB2
VSS_ESD_SHORT_CHB3
VSS_ESD_SHORT_CHB4

GND

PW_AN_1V8_DC2DC
C4807 10p/NC
10n C4812

DC2DC

+1.8VS_WLAN

10K 10K
R4801 R4802
WLAN_ON
BT_ON/OFF

PW_AN_1V8_DC2DC

+3VS_WLAN

X4801 8Y49020005 40MEG
GND2 GND1

XTAL_X1
XTAL_X2

PW_AN_1V8_DC2DC
L4801 1u
PW_DIG_1V0_DC2DC
L4802 1u
6.8N 22u C4818 C4822
22u 6.8N C4819 C4820
10p 10u 10u 1u C4813 C4821 C4827 C4815

U4801

J5 CLK_IN_32KHZ/WIFI_LEDN
L7 WLAN_EN
M6 BT_FM_EN
M7 I2C_CLK
B9 VDD1V8_XTL_LDO
D10 VDD1V8_MISC_SHR
E10 VDD_VBAT_LDO_VBAT_SHR
A8 XTL_X1
A9 XTL_X2
E7 SHR_REFRTRIM_I_CON_SHR
D7 SHR_REFRTRIM_V_CON_SHR
A10 VSS_XTL1
A7 VSS_XTL2
C9 VSS_WIFI_SYNT_DPLL_TDC
N13 VDD5V0_PMU_SD2
N12 PMU_SD2_LX1
N11 VSS_PMU_SD2
N10 PMU_SD2_FB
N5 VDD5V0_PMU_SD1
N6 PMU_SD1_LX1
N7 VSS_PMU_SD1
N8 PMU_SD1_FB
M10 VDD5V0_PMU
M9 VDD1V8_WPR_OUT
N9 VDD1V1_PMU_LDC_LDO
M8 VSS_PMU
L9 VSS_PMU_SD_ISO_SHR

MISC4 Interface 4 of 4

VPP_OTP K5
VDD1V8_DIG_IO_MUX J7
VDD1V8_WPR_IN L5
VDD1V8_DIG_IO K11
VDD1V0_DIG_1 N3
VDD1V0_DIG_2 C8
VDD1V0_DIG_3 J11
VSS_DIG_02 B8
VSS_DIG_01_1 N1
VSS_DIG_01_2 N2
VSS_DIG_03_1 K15
VSS_DIG_03_2 L14
VSS_DIG_03_3 N16
VSS_DIG_04 J8
VDD_BT_VBAT J3
VDD1V8_BT_DIG H2
VDD1V8_BT_RF H1
VSS_BT_DIG1 G3
VSS_BT_DIG2 H3
VSS_BT_RF1 G4
VSS_BT_RF2 H4
VSS_BT_TX_MIX J2
VDD_FMR_TDC H12
VDD_FMR_DCDC J12
VDD_FMR_RF1 J14
VDD_FMR_RF2 J15
FMR_IN_INT H16
FMR_IN_HS H15
FMR_IN_HSX G14
VSS_FMR_RF H14
VSS_FMR_DIG H13

PW_DIG_1V0_DC2DC +1.8VS_WLAN

10K R4808
2.2u 100n 10p
C4823 C4824 C4817
PW_AN_1V8_DC2DC

+3VS_WLAN

1.8K/0.2W LB4803
22u C4814

Interface

+1.8VS_WLAN

Q4802 FETN-GSD
R4809 R4810
10K 10K
/PCIE_CLKREQ_WLAN — CLKREQ
Q4801 FETN-GSD
VGS=0.95 max
WAKE_PCIE — PE_WAKE_N

+3VS_WLAN

1U C4828

CL_CLK R4814 0 /vPro CL_CLK_R
CL_DATAR4806 0 /vPro CL_DATA_R
USB_PN5_BT
USB_PP5_BT

CLKREQ
PE_WAKE_N

+1.8VS_WLAN
10K R4803
/vPro

+1.8VS_WLAN
10K R4804
PCIE rest PU
/CL_RSTR4815 0 /CL_RST_R
/vPro
/PLT_RST_BUFD4801 — PE_PERST_N

U4801

MIPI_TRACE_CLK
MIPI_TRACE_DATA0
MIPI_TRACE_DATA1
MIPI_TRACE_DATA2
MIPI_TRACE_DATA3
MFUART1_TXD
MFUART1_RXD
MFUART1_RTS
MFUART1_CTS
MFUART2_TXD
MFUART2_RXD
BT_UART_RTS
BT_UART_CTS
BT_UART_TXD
BT_UART_RXD
CLINK_MCLK
CLINK_MDATA
BT_USB_N
BT_USB_P
VDD3V3_DIG_BT_USB
WIFI_CLKREQN
WIFI_PWAKEN_OBFFN
WIFI_GPIO3/SPI_CSN
WIFI_GPIO4
SPI_DOUT
SPI_DIN
TEST2
WIFI_MRSTN_TCXO_CLK_REQ
WIFI_PERSTN

MISC1 Interface 1 of 4

JTAG_CLK
JTAG_TMS
JTAG_TDI
JTAG_TDO
JTAG_RSTN/BT_RFKILLN
MFUART0_TXD/I2C_DAT
MFUART0_RXD
MFUART0_RTS
MFUART0_CTS/SPI_CLK
COEX_BLANK/I2C_ALERTN
BT_WAKEUP_HOST/BT_LEDN
BT_PCM_OUT
BT_PCM_IN
BT_PCM_FR1
BT_PCM_CLK
SDIO_WAKEN/WIFI_RFKILLN
SDIO_CLK
SDIO_CMD
SDIO_DATA0
SDIO_DATA1
SDIO_DATA2
SDIO_DATA3
PE_CLK_N
PE_CLK_P
PE_TX_N
PE_TX_P
PE_RX_N
PE_RX_P
VDD1V8_SHR

JTAG_CLK TP4805
JTAG_TMS R4812 10K
JTAG_TDI R4813 10K
JTAG_TDO TP4802

+1.8VS_WLAN
R4811 10K
/NC
BT_RFKILLN

+1.8VS_WLAN
/NC
10K R4807
Wi-Fi/BT RF is reset when Low
R4805 0 WIFI_RFKILLN

CLK_PCIE_WLAN_N
CLK_PCIE_WLAN_P
C4802 100n PCIE9_WIFI_RX_N
C4801 100n PCIE9_WIFI_RX_P
PCIE9_WIFI_TX_N
PCIE9_WIFI_TX_P
PW_AN_1V8_DC2DC

Bootstrap Table

Ball name	Bootstrap	Description (Internal PU 100K)	Default
JTAG_TMS	PCI_SDIO	Bootstrap to select WIFI PCI (L) or SDIO (H - Default)	H
JTAG_TDI	USB_UART	Bootstrap to select BT USB (L) or UART (H - Default)	H
JTAG_TDO	TCXO_SEL	Bootstrap to select external TCXO input (L) or XTAL (H - Default)	H

Their values are latched during the rising edge of the WLAN_EN or BT_FM_E

+3VS_WLAN

+3VS — LB4802 — /NO_vPro
+3VO — U4802 TPS22964C
VIN1 VIN2 VOUT1 VOUT2
/SLP_WLAN — ON GND
/vPro

+1.8VS_WLAN

+1.8VS — LB4801 — /NO_vPro
+1.8VO — U4803 TPS22964C
VIN1 VIN2 VOUT1 VOUT2
/SLP_WLAN — ON GND
/vPro

The type and specification of the components refer to the BOM

				NA	
				ECA NO	DATE
DESIGNED	LIWENSHENG87654565	Watt		65674354	
REVIEWED	LISI XXXXX				
		VER	PART_NUMBER	SHEET	32_CWS_WIFI_BT_2
		A	03030001	HUAWEI TECH CO.,LTD.	

49_WIFI_BT_2

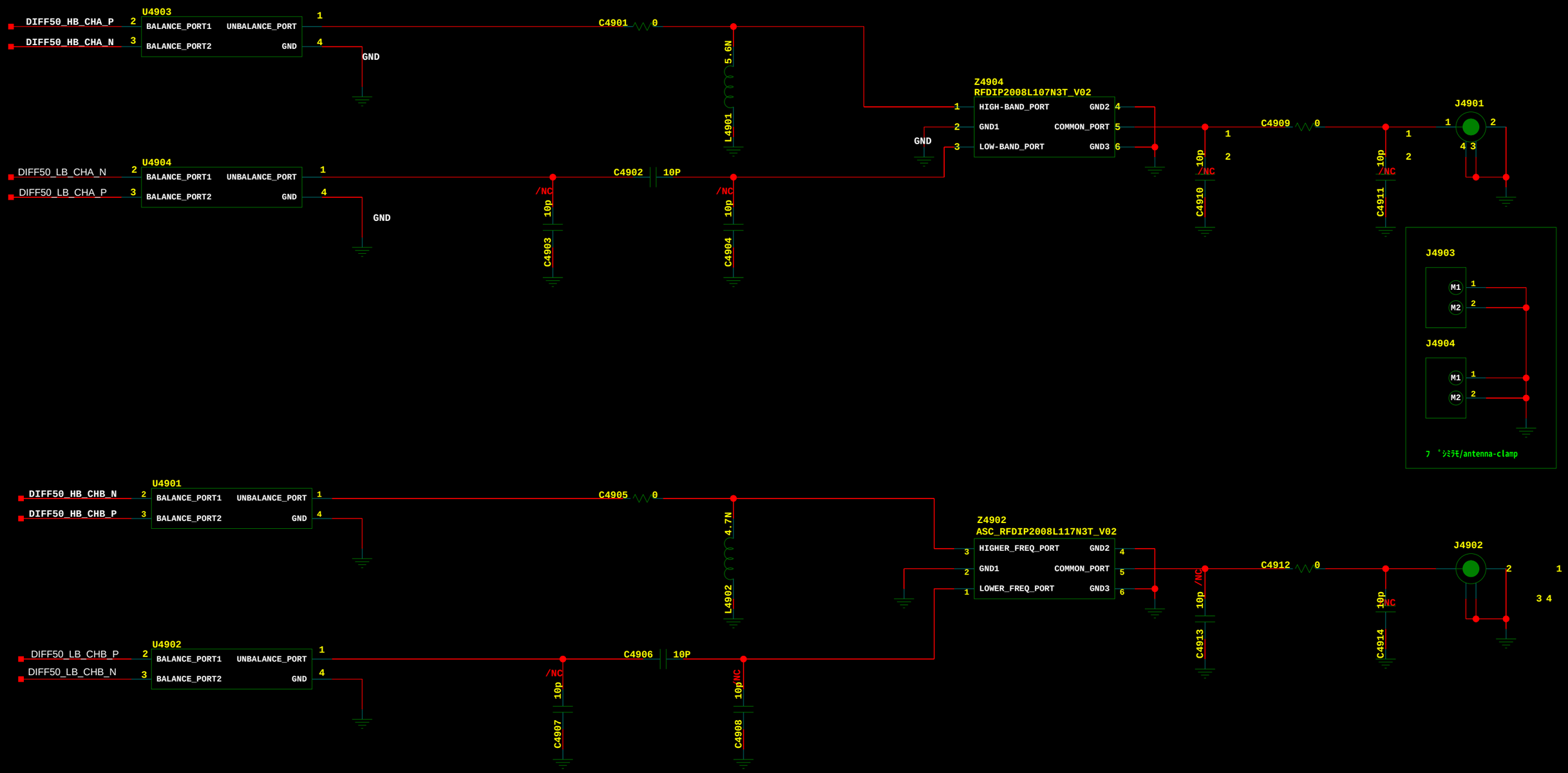

The type and specification of the components refer to the BOM

				NA	
				ECA NO	DATE
DESIGNED	LIWENSHENG87654565	SH0WATTM		65674354	
REVIEWED	LISI XXXXX				
		VER	PART_NUMBER	SHEET 42 OF 42	
		A	03030001	HUAWEI TECH CO.,LTD.	

50_M2 NGFF_ PCIe/Sata SSD

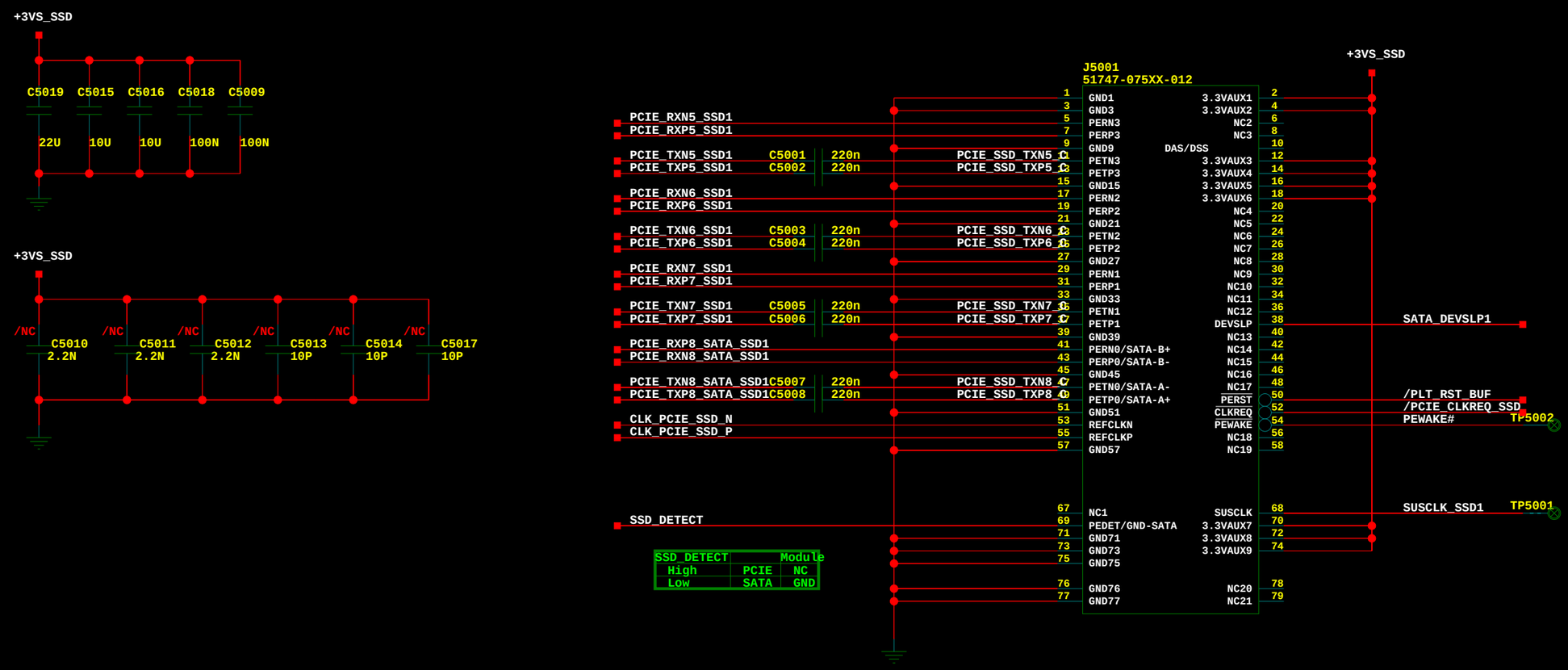

SSD_DETECT		Module
High	PCIE	NC
Low	SATA	GND

Pin	Pin Define	Pin	Pin Define
P1	GND	P2	3.3Vaux
P3	GND	P4	3.3Vaux
P5	PERn3	P6	NC
P7	PERp3	P8	NC
P9	GND	P10	DAS/DSS#
P11	PETn3	P12	3.3Vaux
P13	PETp3	P14	3.3Vaux
P15	GND	P16	3.3Vaux
P17	PERn2	P18	3.3Vaux
P19	PERP2	P20	NC
P21	GND	P22	NC
P23	PETn2	P24	NC
P25	PETP2	P26	NC
P27	GND	P28	NC
P29	PERn1	P30	NC
P31	PERp1	P32	NC
P33	GND	P34	NC
P35	PETn1	P36	NC
P37	PETp1	P38	DEVSLP
P39	GND	P40	NC
P41	PERn0/SATA-B+	P42	NC
P43	PERp0/SATA-B-	P44	NC
P45	GND	P46	NC
P47	PETn0/SATA-A-	P48	NC
P49	PETp0/SATA-A+	P50	PERST#
P51	GND	P52	CLKREQ#
P53	REFCLKN	P54	PEWAKE#
P55	REFCLKP	P56	NC
P57	GND	P58	NC
M KEY			
P67	NC	P68	SUSCLK
P69	PEDET/GND-SATA	P70	3.3Vaux
P71	GND	P72	3.3Vaux
P73	GND	P74	3.3Vaux
P75	GND		
P76	GND	P78	NC
P77	GND	P79	NC

The type and specification of the components refer to the BOM

				NA	
				ECA NO	DATE
DESIGNED	LIWENSHENG87654565	Watt		65674354	
REVIEWED	LISI XXXXX				
		VER	PART_NUMBER	SHEET	OF
		A	03030001	29	

50_M2 NGFF_ PCIe/Sa

HUAWEI TECH CO.,LTD.

51:TPM/TCM

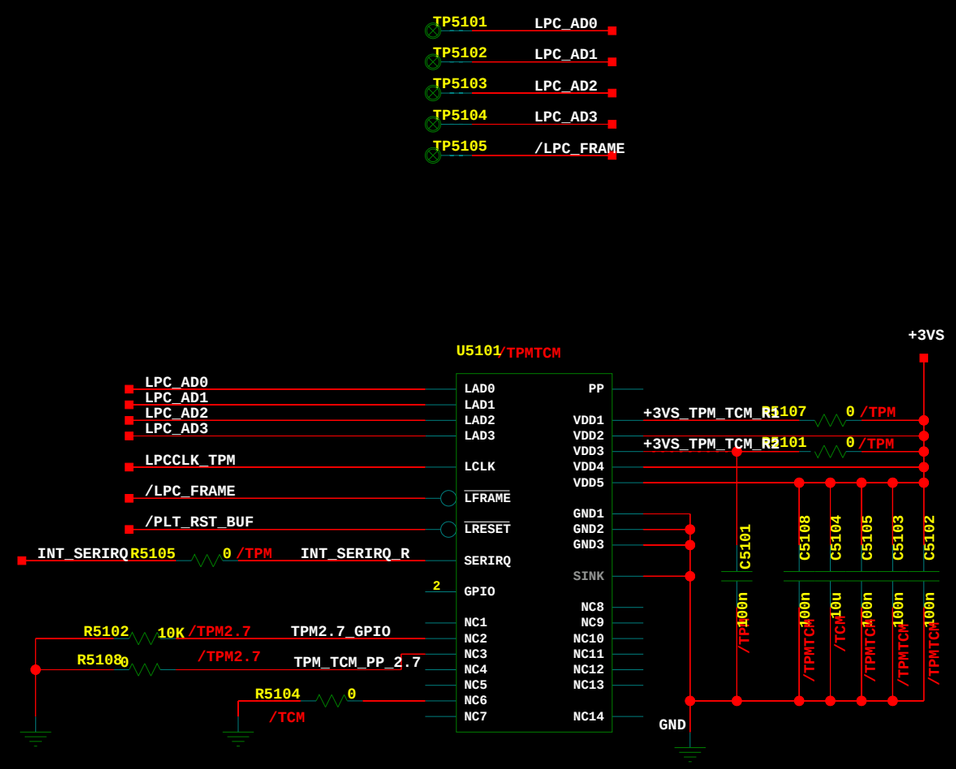

TPM	/TPM /TPMTCM mount
TCM	/TCM /TPMTCM mount
fTPM	/TCM /TPM /TPMTCM unmount

The type and specification of the components refer to the BOM

				NA	
				ECA NO	DATE
DESIGNED	LIWENSHENG87654565	Watt		65674354	
REVIEWED	LISI XXXXX				
		VER	PART_NUMBER	SHEET 77 OF 44	
		A	03030001	HUAWEI TECH CO.,LTD.	

52_BLANK

The type and specification of the components refer to the BOM

				NA	
				ECA NO	DATE
DESIGNED	LIWENSHENG87654565	Mach		65674354	
REVIEWED	LISI XXXXX				
		VER	PART_NUMBER	SHEET 103 OF 73	
		A	03030001	HUAWEI TECH CO.,LTD.	

53_USB Camera

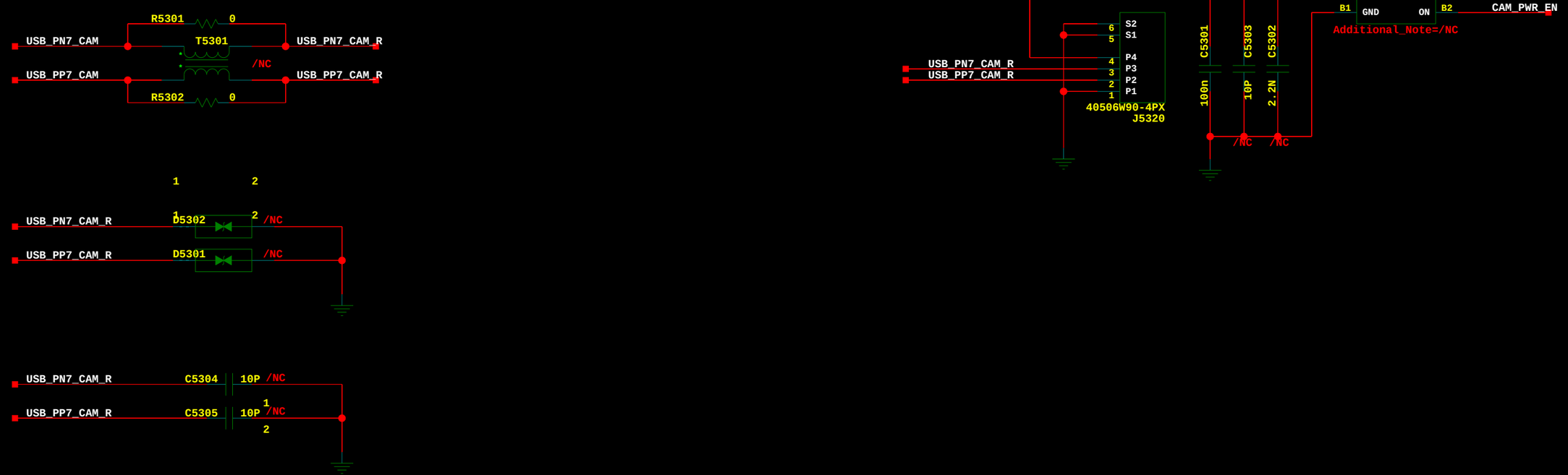

The type and specification of the components refer to the BOM

				NA	
				ECA NO	DATE
DESIGNED	LIWENSHENG87654565	Mach		65674354	
REVIEWED	LISI XXXXX				
		VER	PART_NUMBER	SHEET 103 OF 67	
		A	03030001	HUAWEI TECH CO.,LTD.	

54_TYPE C_Conn_1

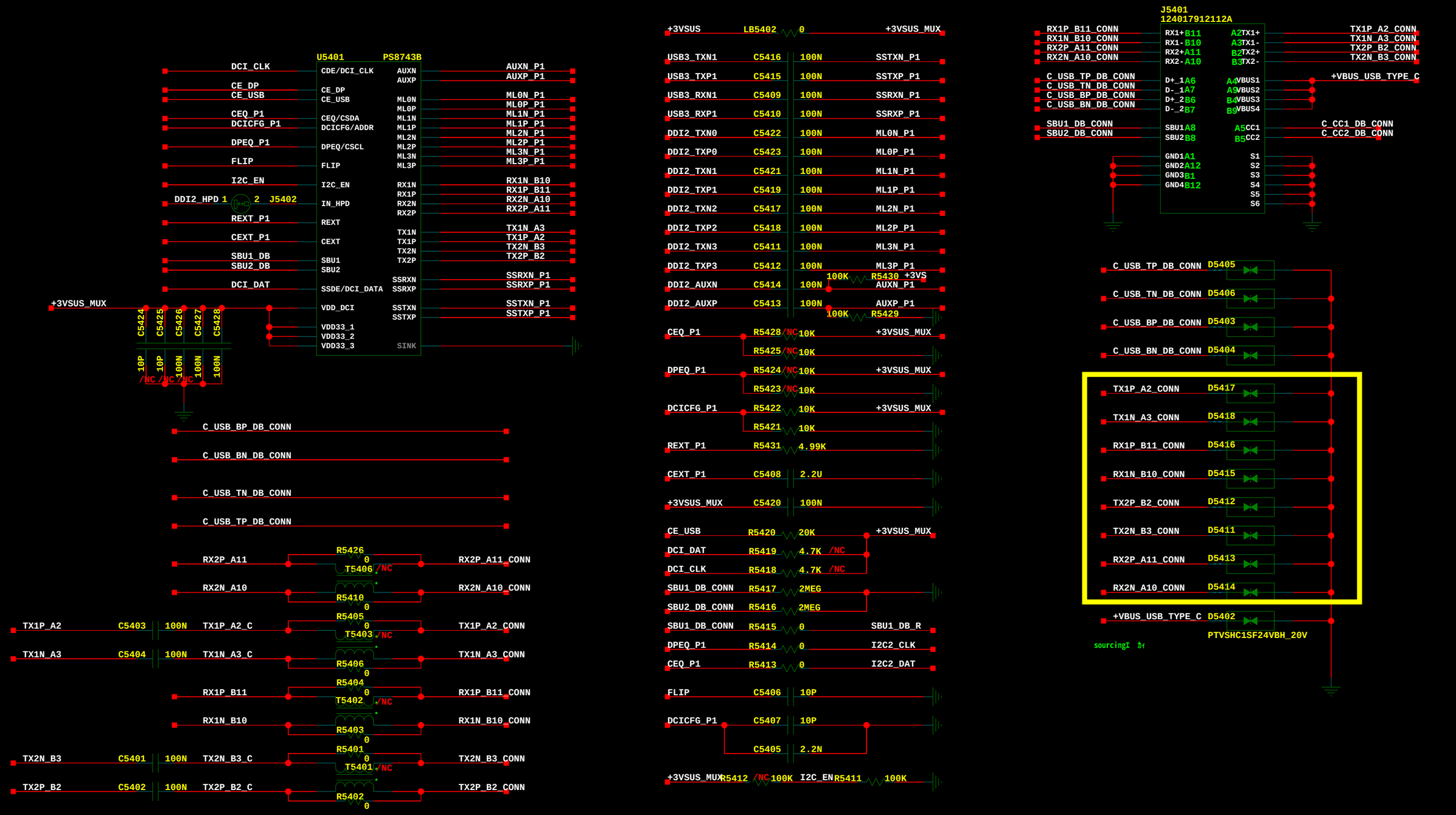

The type and specification of the components refer to the BOM

				NA	
				ECA NO	DATE
DESIGNED	LIWENSHENG87654565	Watt		65674354	
REVIEWED	LISI XXXXX				
		VER	PART_NUMBER	SHEET 94 OF 57	
		A	03030001	HUAWEI TECH CO.,LTD.	

55_USB_ Type C_CC+PD_1

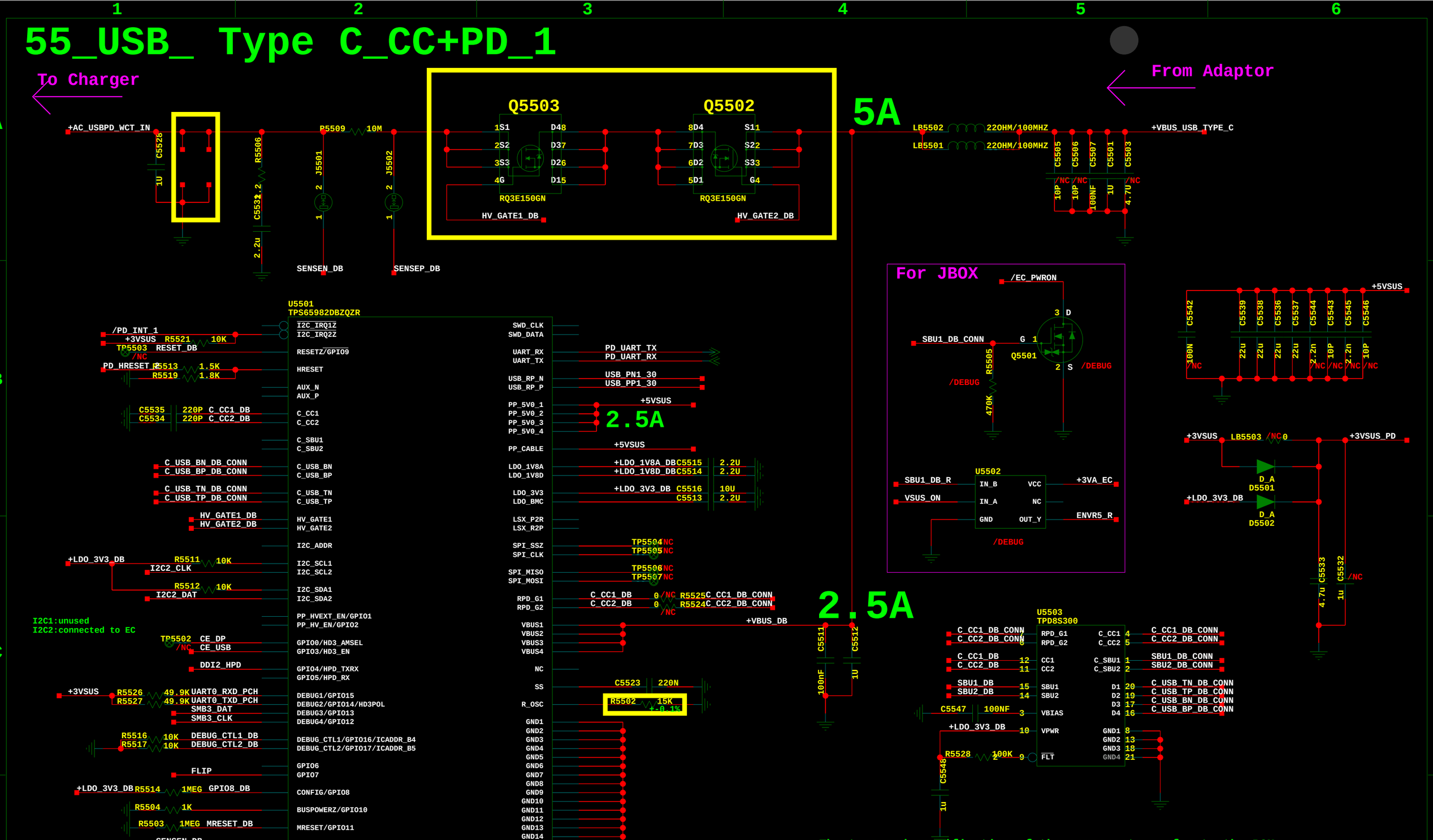

The type and specification of the components refer to the BOM

				NA	
				ECA NO	DATE
DESIGNED	LIWENSHENG87654565				
		Watt		65674354	
REVIEWED	LISI XXXXX				
		VER	PART_NUMBER	SHEET 51 OF 30	
		A	03030001	HUAWEI TECH CO.,LTD.	

56_TYPE C_Conn_2

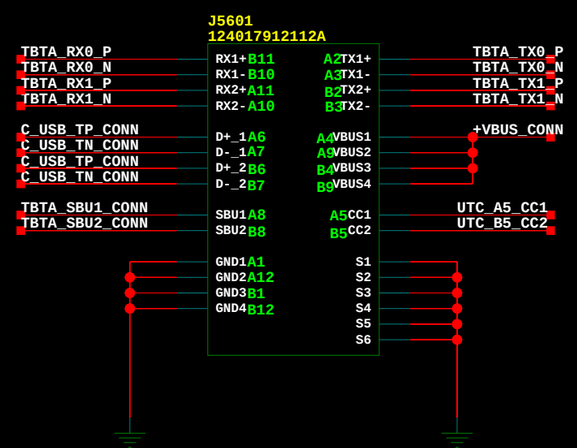

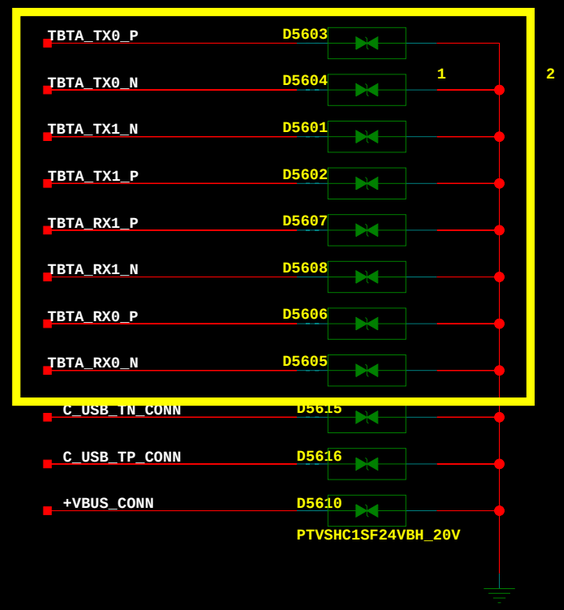

The type and specification of the components refer to the BOM

				NA	
				ECA NO	DATE
DESIGNED	LIWENSHENG87654565	Watt		65674354	
REVIEWED	LISI XXXXX				
		VER	PART_NUMBER	SHEET 95 OF 58	
		A	03030001	HUAWEI TECH CO.,LTD.	

57_USB_ Type C_CC+PD_2

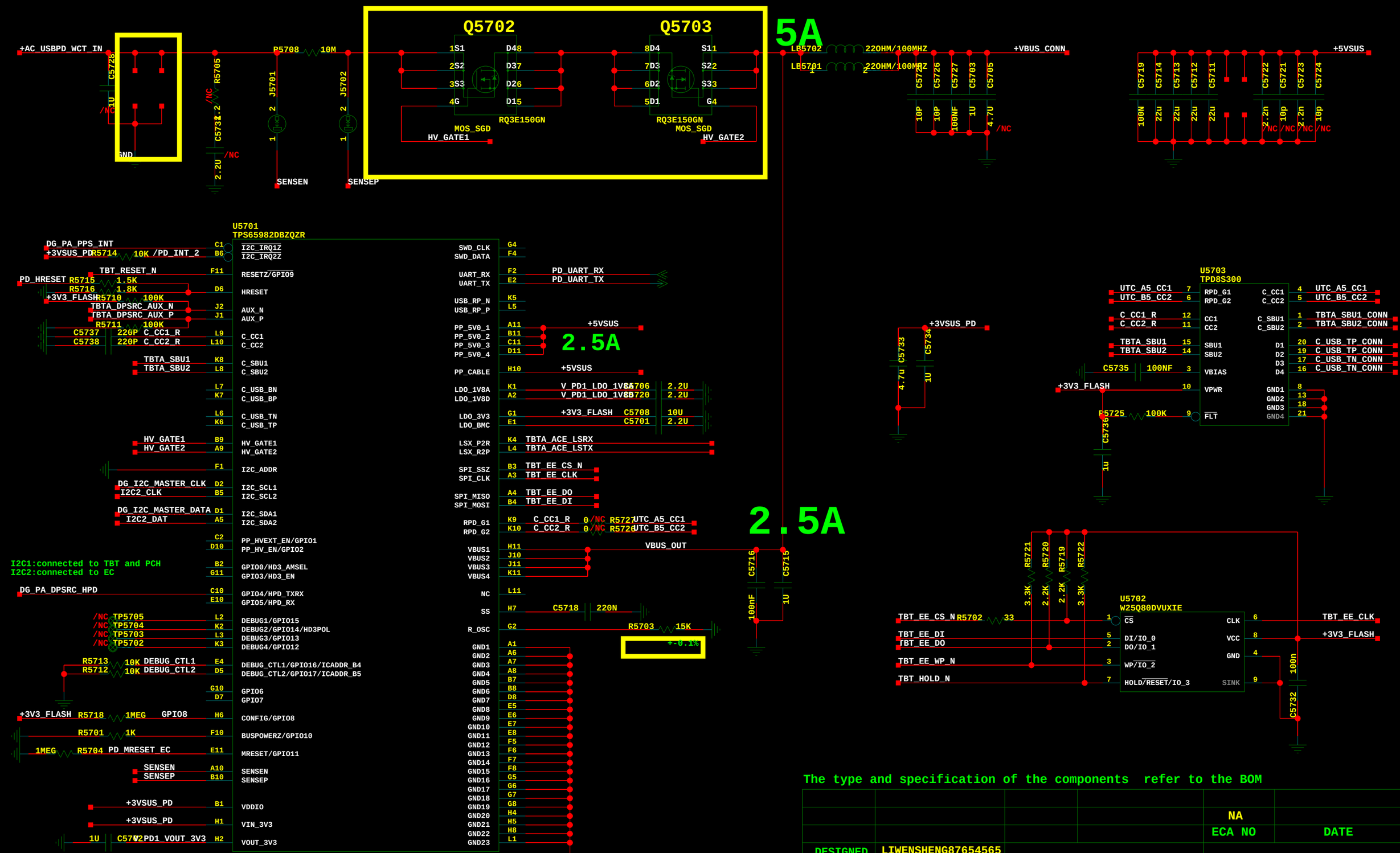

The type and specification of the components refer to the BOM

				NA	
				ECA NO	DATE
DESIGNED	LIWENSHENG87654565	Watt		65674354	
REVIEWED	LISI XXXXX				
		VER	PART_NUMBER	SHEET 51 OF 30	
		A	03030001	HUAWEI TECH CO.,LTD.	

58_BLANK

The type and specification of the components refer to the BOM

				NA	
				ECA NO	DATE
DESIGNED	LIWENSHENG87654565	SH0WATTM		65674354	
REVIEWED	LISI XXXXX				
		VER	PART_NUMBER	SHEET 62 OF 62	
		A	03030001	HUAWEI TECH CO.,LTD.	

59_USB_Type A_CARD

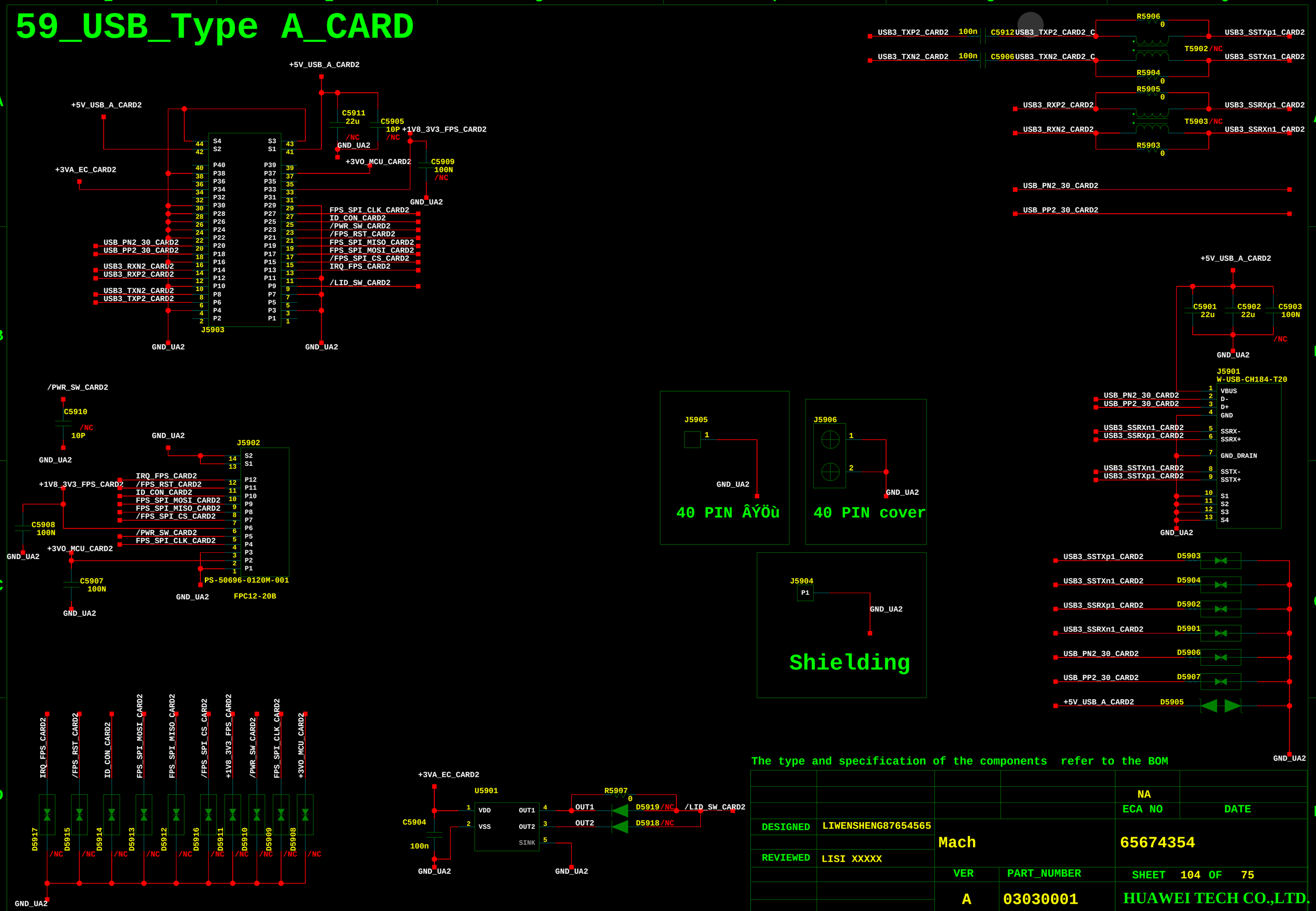

The type and specification of the components refer to the BOM

				NA	
				ECA NO	DATE
DESIGNED	LIWENSHENG87654565	Mach		65674354	
REVIEWED	LISI XXXXX				
		VER	PART_NUMBER	SHEET 104 OF 75	
		A	03030001	HUAWEI TECH CO.,LTD.	

60_PWRIN_CHARGER

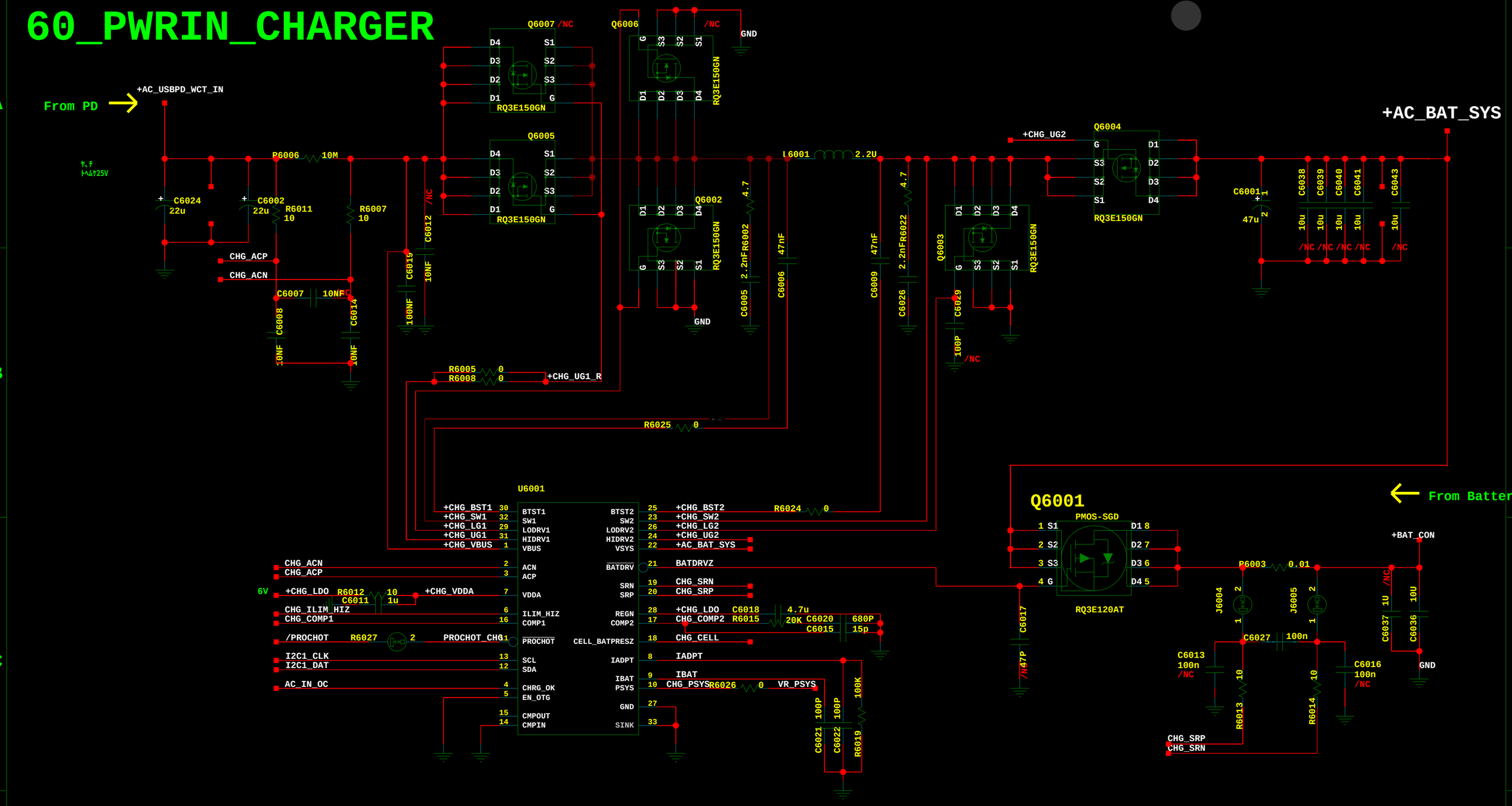

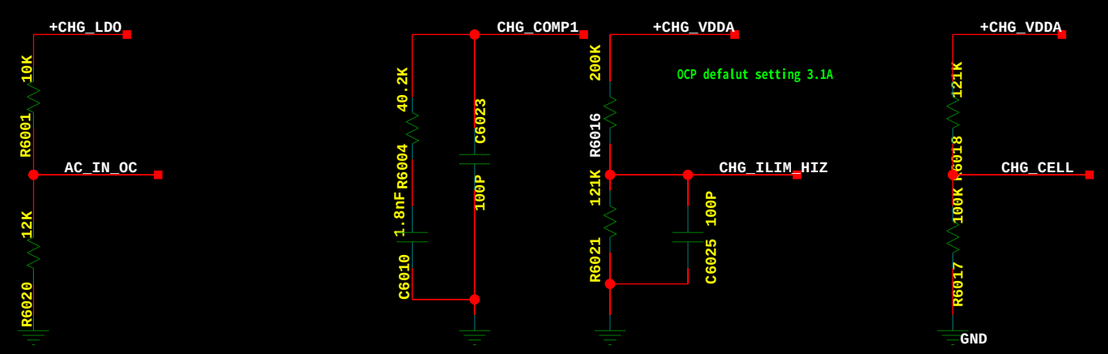

The type and specification of the components refer to the BOM

				NA	
				ECA NO	DATE
DESIGNED	LiuQinKai l00365571				
		SHOWATTM		65674354	
REVIEWED	LISI XXXXX				
		VER	PART_NUMBER	SHEET 57 OF 57	
		A	03030001	HUAWEI TECH CO.,LTD.	

61£ºBAT CONN

Battery Connector

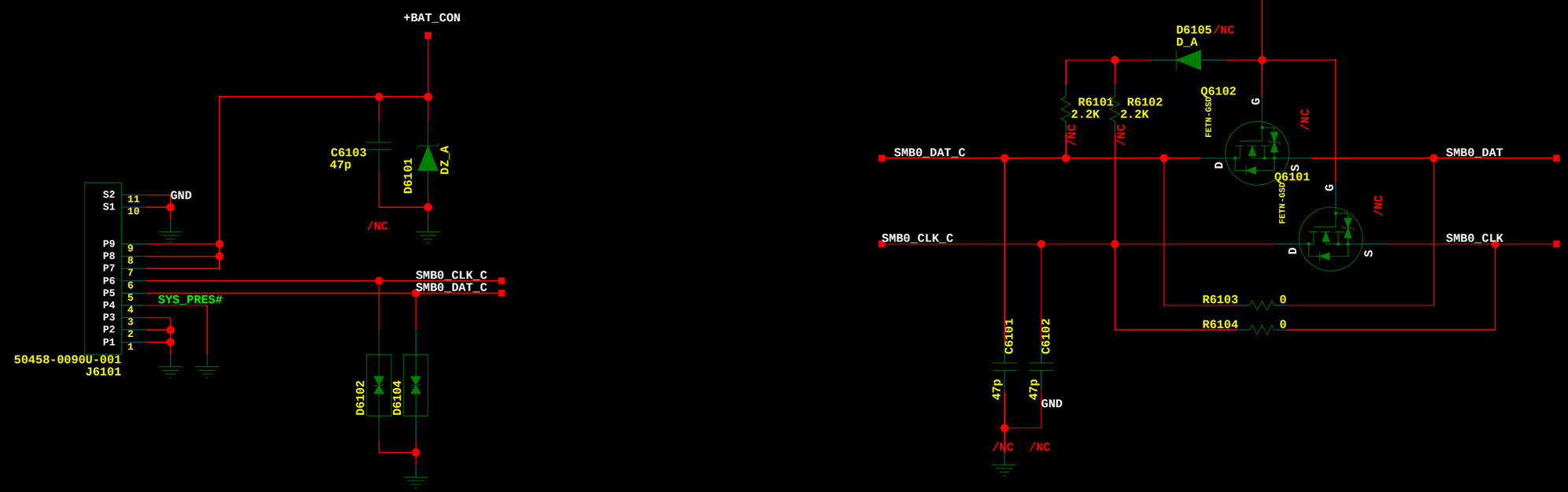

The type and specification of the components refer to the BOM

				NA	
				ECA NO	DATE
DESIGNED	LiuQinKai l00365571				
		Mach		65674354	
REVIEWED	LISI XXXXX				
		VER	PART_NUMBER	SHEET 105 OF 68	
		A	03030001	HUAWEI TECH CO.,LTD.	

62_IMVP8_CONTROLER

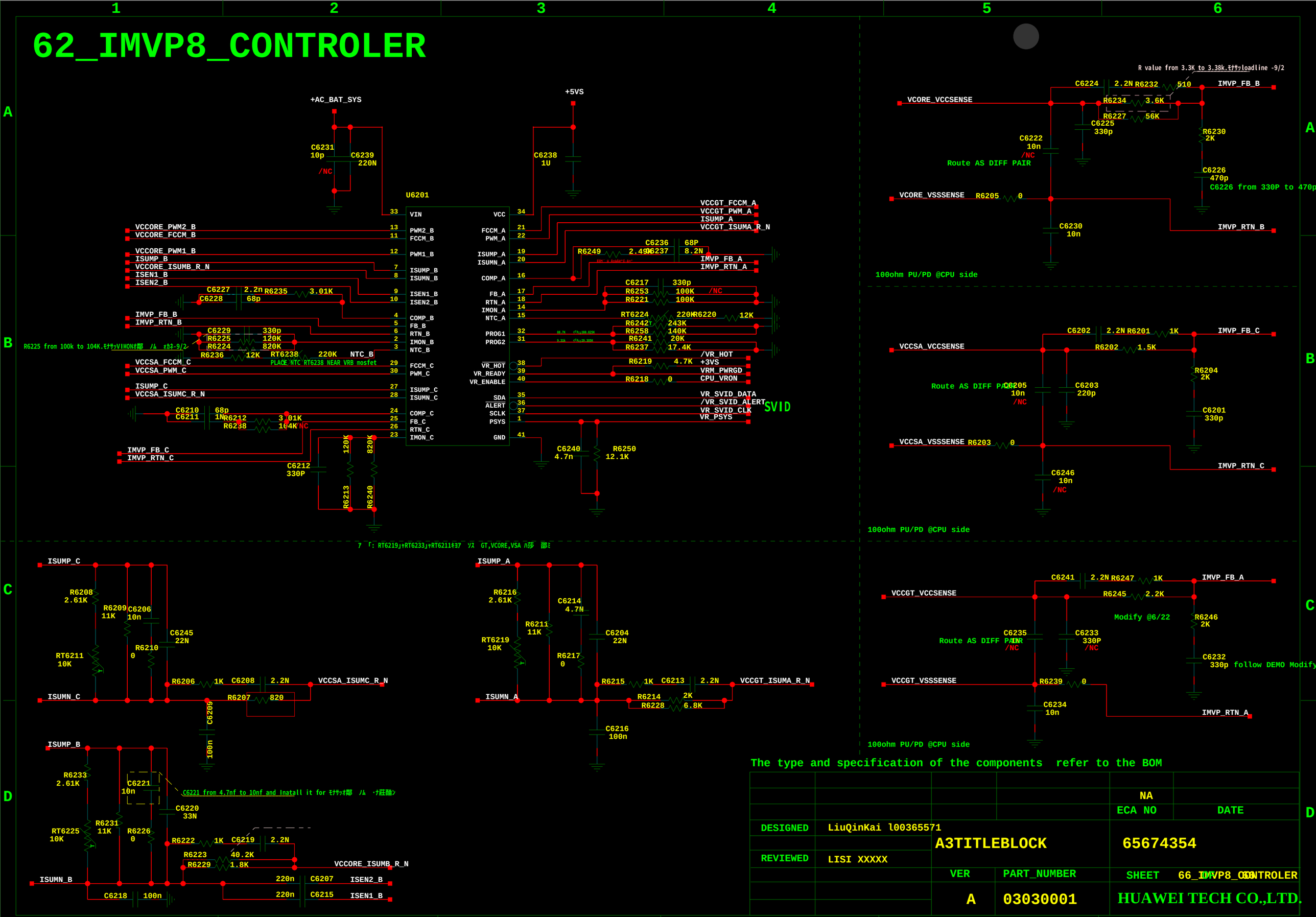

The type and specification of the components refer to the BOM

				NA	
				ECA NO	DATE
DESIGNED	LiuQinKai l00365571				
		A3TITLEBLOCK		65674354	
REVIEWED	LISI XXXXX				
		VER	PART_NUMBER	SHEET	66_IMVP8_CONTROLER
		A	03030001	HUAWEI TECH CO.,LTD.	

63_IMVP8_CPU_VCCORE

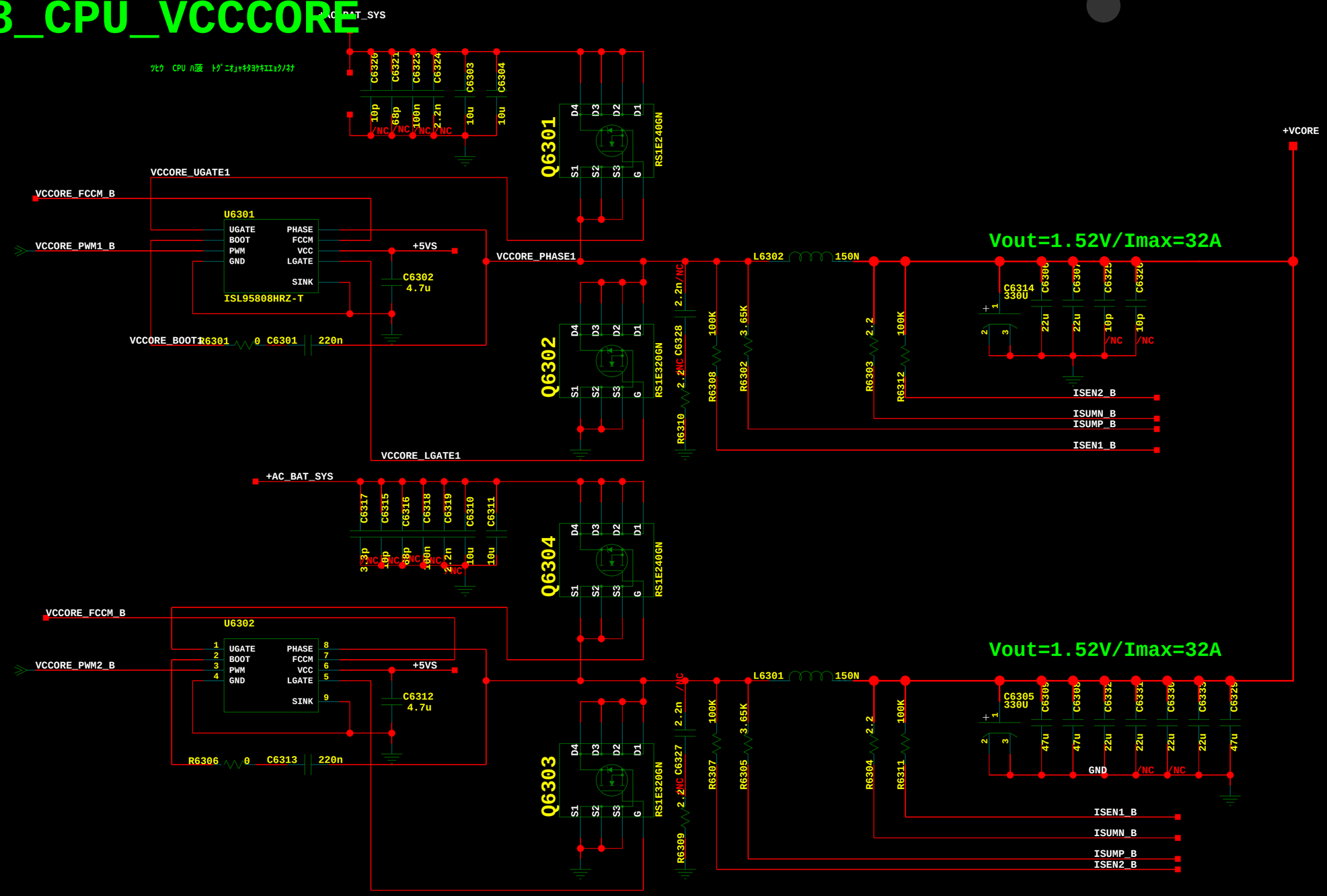

The type and specification of the components refer to the BOM

				NA	
				ECA NO	DATE
DESIGNED	LiuQinKai l00365571	SH0WATTM		65674354	
REVIEWED	LISI XXXXX				
		VER	PART_NUMBER	SHEET 67 OF 67	
		A	03030001	HUAWEI TECH CO.,LTD.	

64:IMVP8_CPU_VCCGT

该文档是极速PDF编辑器生成,

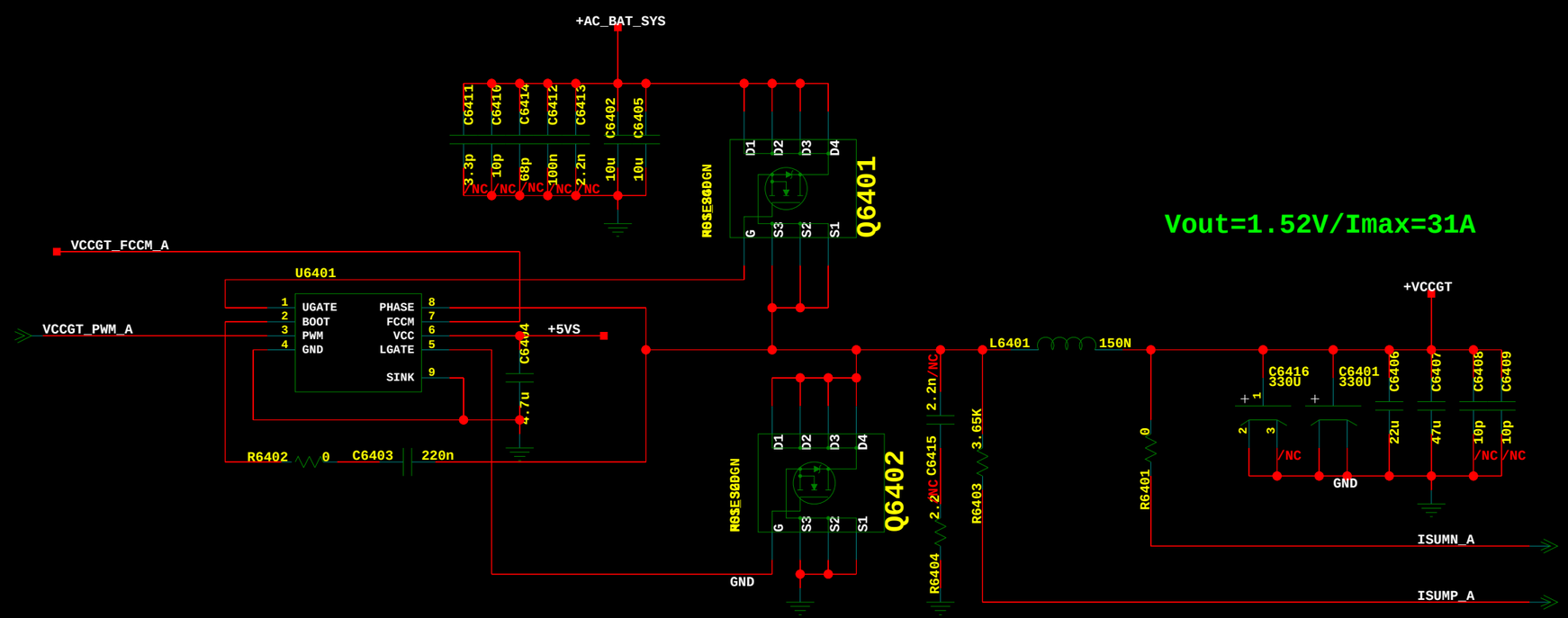

The type and specification of the components refer to the BOM

				NA	
				ECA NO	DATE
DESIGNED	LiuQinKai l00365571	SH0WATTM		65674354	
REVIEWED	LISI XXXXX				
		VER	PART_NUMBER	SHEET 68 OF 68	
		A	03030001	HUAWEI TECH CO.,LTD.	

65:IMVP8_CPU_VCCSA

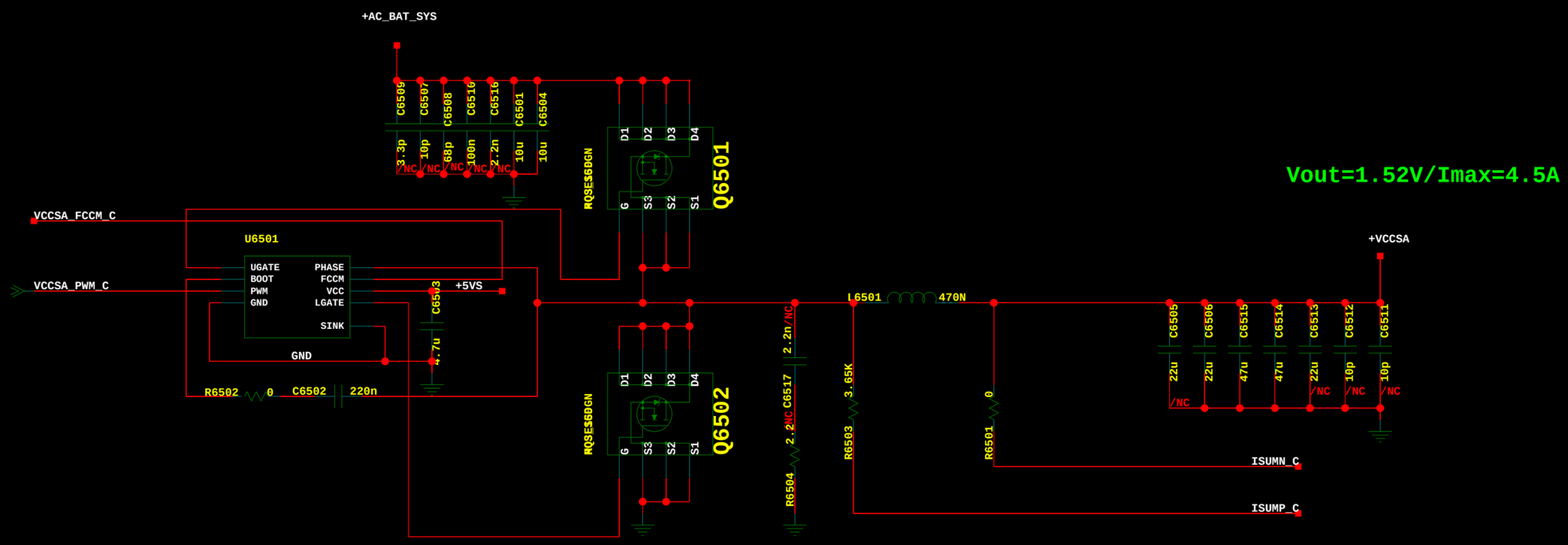

The type and specification of the components refer to the BOM

				NA	
				ECA NO	DATE
DESIGNED	LiuQinKai l00365571	SH0WATTM		65674354	
REVIEWED	LISI XXXXX				
		VER	PART_NUMBER	SHEET 69 OF 69	
		A	03030001	HUAWEI TECH CO.,LTD.	

66:ROP PMIC1

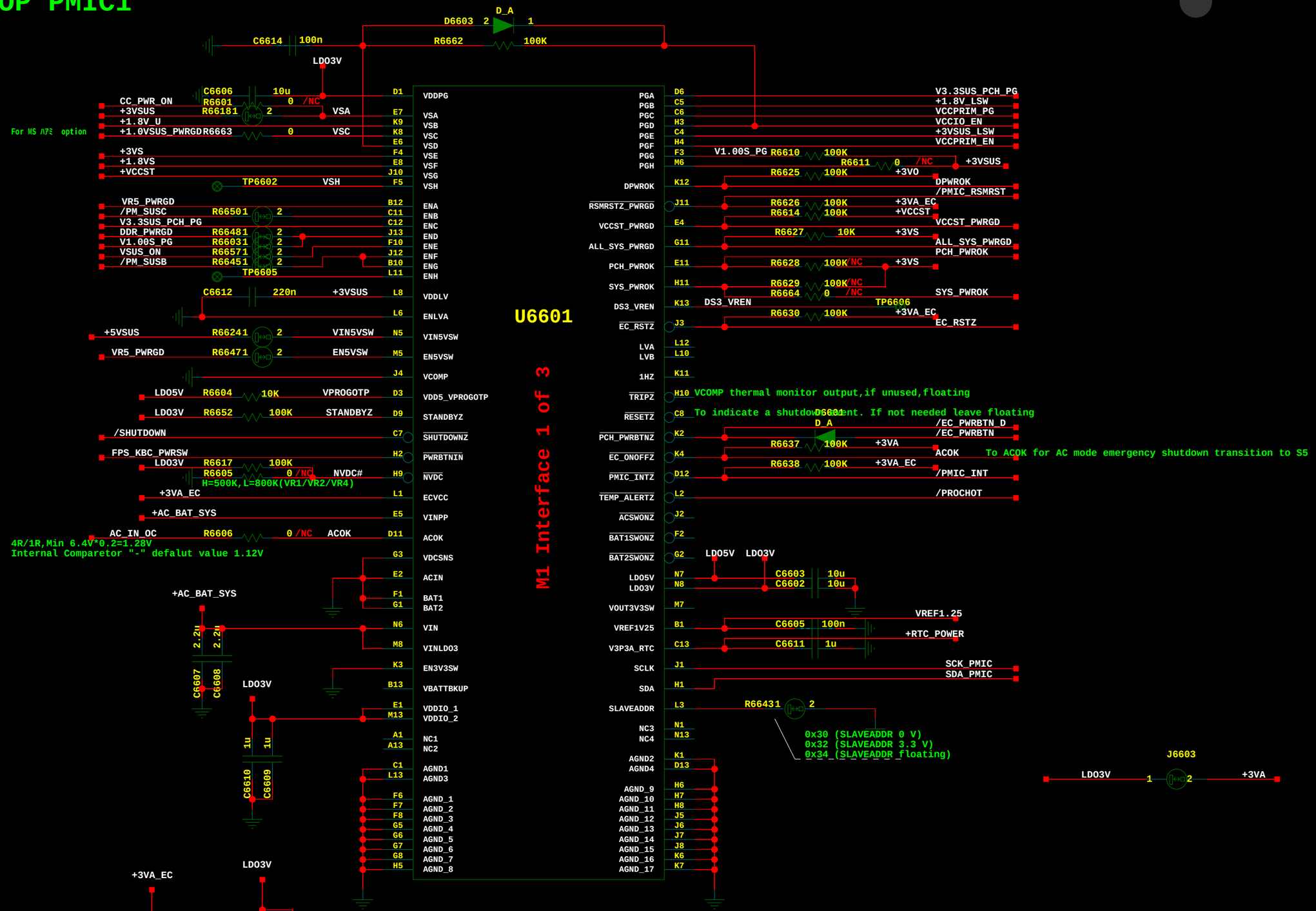

The type and specification of the components refer to the BOM

				NA	
				ECA NO	DATE
DESIGNED	LIUQINKAI 00365571	Watt		65674354	
REVIEWED	LISI XXXXX				
		VER	PART_NUMBER	SHEET	71-ROP_PMIC_1
		A	03030001	HUAWEI TECH CO.,LTD.	

67_ROP PMIC_2

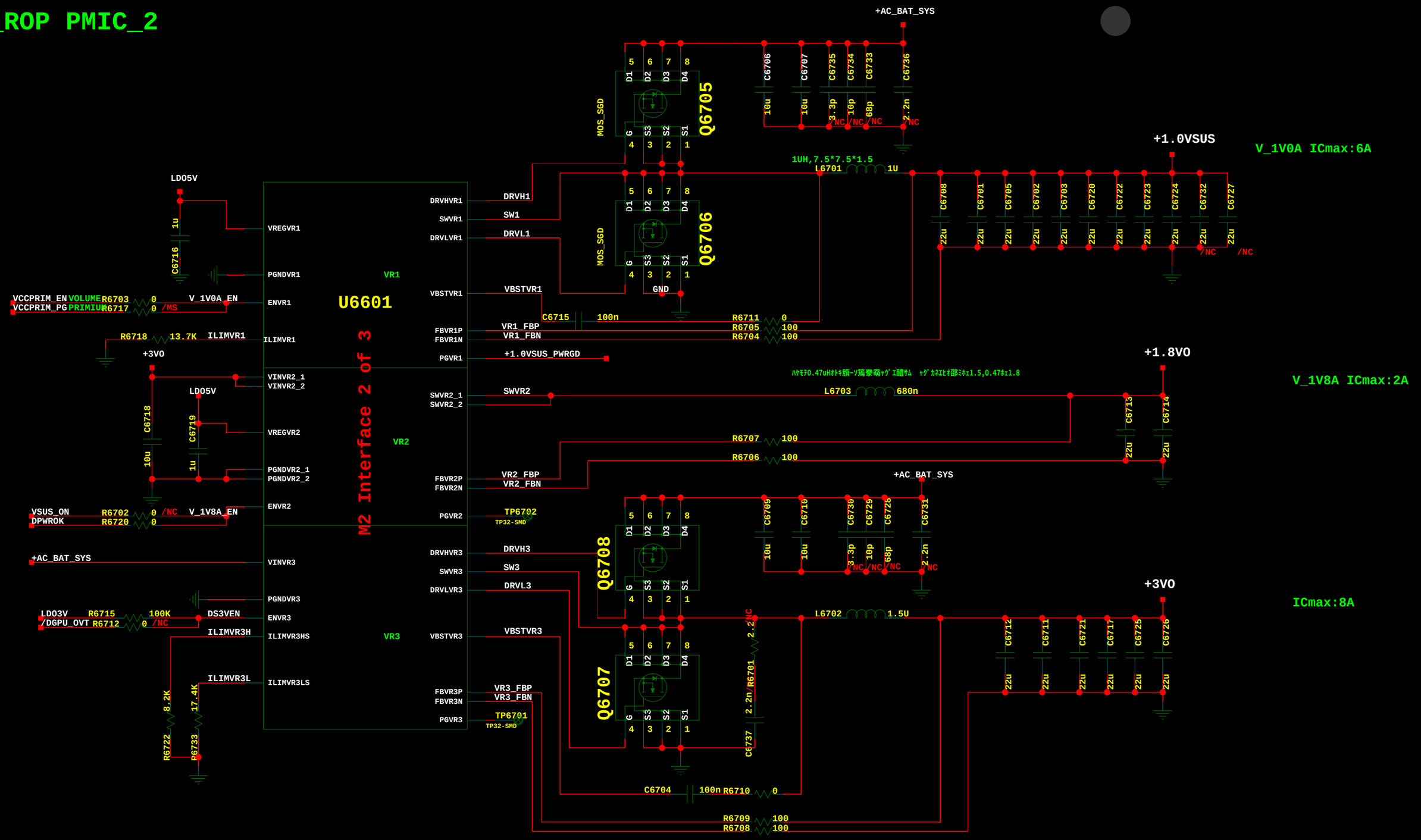

The type and specification of the components refer to the BOM

				NA	
				ECA NO	DATE
DESIGNED	LIUQINKAI 00365571	SH0WATTM		65674354	
REVIEWED	LISI XXXXX				
		VER	PART_NUMBER	SHEET 72 OF 72	
		A	03030001	HUAWEI TECH CO.,LTD.	

68:ROP PMIC3

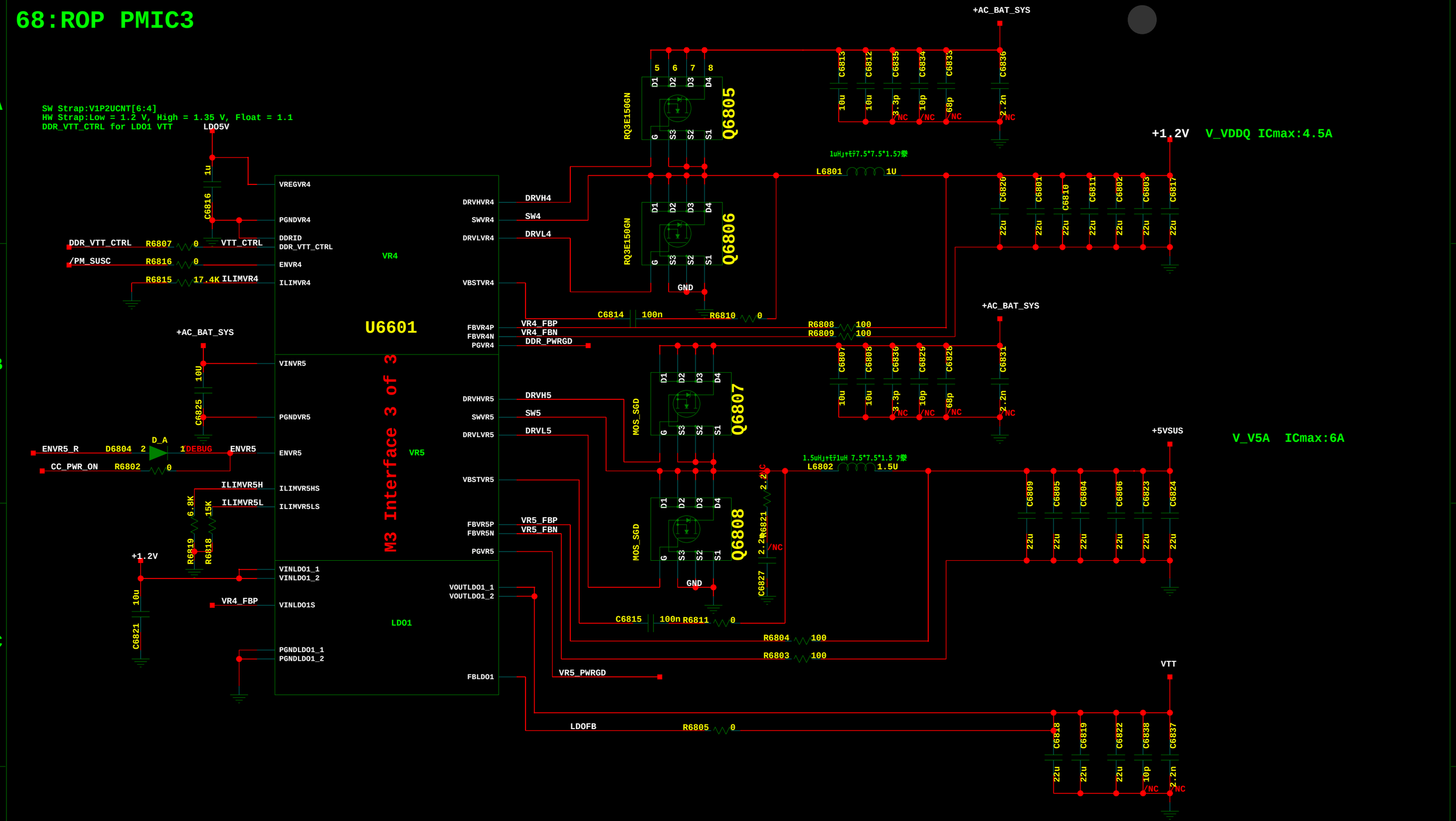

The type and specification of the components refer to the BOM

				NA	
				ECA NO	DATE
DESIGNED	LIWENSHENG87654565	Mach		65674354	
REVIEWED	LISI XXXXX			68-ROP_PMIC_3	
		VER	PART_NUMBER	SHEET	OF 75
		A	03030001	HUAWEI TECH CO.,LTD.	

69_ROP PMIC_4

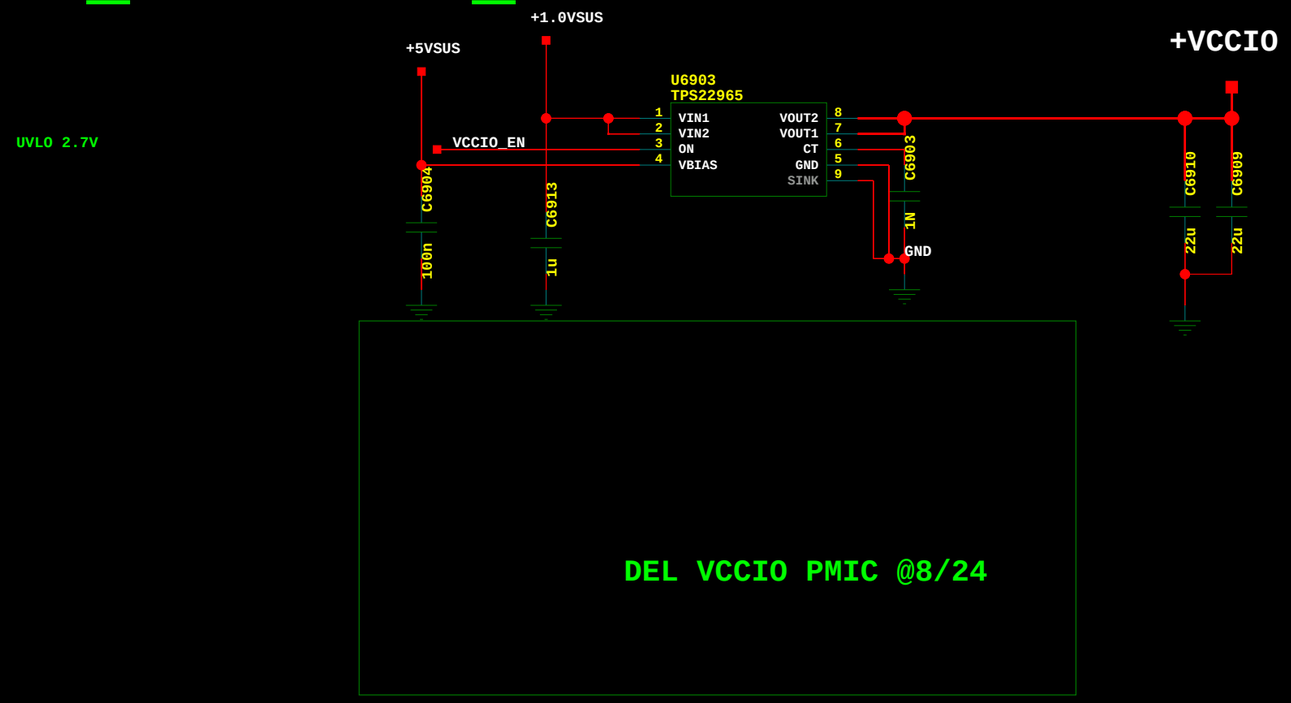

0.95V
Iccmax:3.1A
OCP:3.1A*2?

VCCIO 0.975 defalut on KBL-U
VID(0,1)=1 ,1
VCCIO can 0.95 on KBL-U

VPRIM VID by control PCH

DEL PRIM VID @8/17

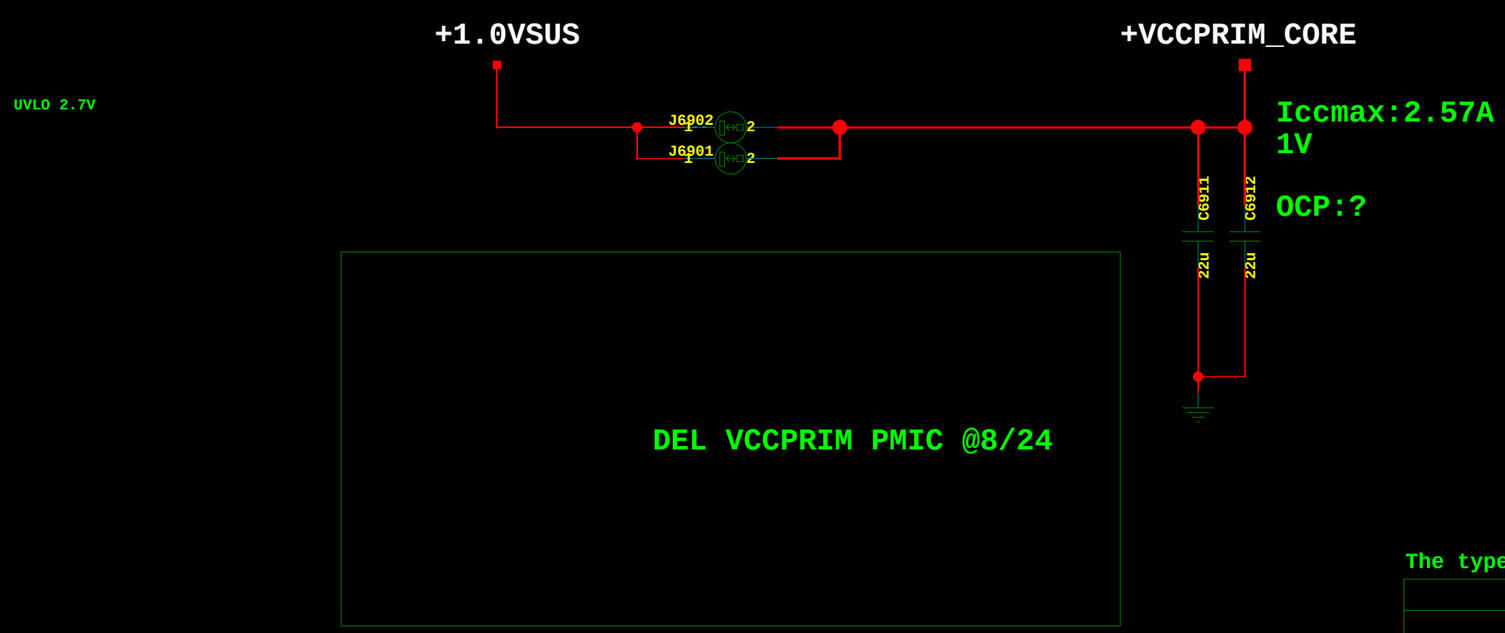

Iccmax:2.57A
1V

OCP:?

PART NUMBER	LPM LOGIC	VID1 LOGIC	VID0 LOGIC	OUTPUT VOLTAGE (V)
TPS62134A	0	X	X	0(LPM)
	1	0	0	0.85
	1	0	1	0.875
	1	1	0	0.950
	1	1	1	0.975
TPS62134D	0	X	X	0.7(LPM)
	1	0	0	0.85
	1	0	1	0.90
	1	1	0	0.95
	1	1	1	1

0.85V VCCIO & 2GT/s OPI setting has been fully validated on KBL-Y RVP.
And 0.95V VCCIO & 2GT/s OPI can will also work but consume a little more power (up to 250m

The type and specification of the components refer to the BOM

				NA	
				ECA NO	DATE
DESIGNED	LIUQINKAI 00365571	SH0WATTM		65674354	
REVIEWED	LISI XXXXX				
		VER	PART_NUMBER	SHEET 74 OF 74	
		A	03030001	HUAWEI TECH CO.,LTD.	

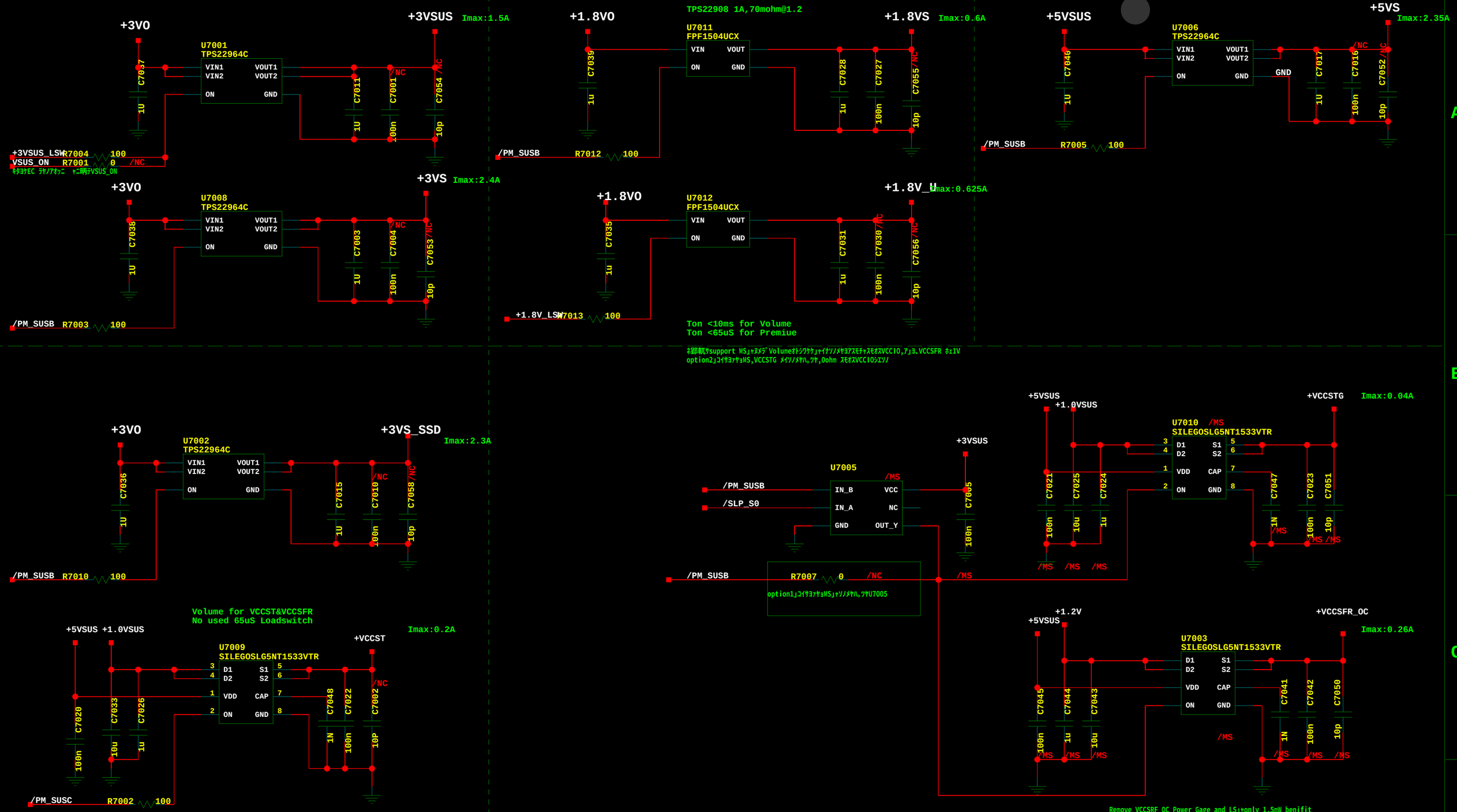

The type and specification of the components refer to the BOM

LS ﾀｲﾌﾟ	Imax(continuous)	Vin	Ron	Package
FPF1504	1.5A	1V--3.6V	15mｵｰﾑ/3.3V,20mｵｰﾑ/1.8V,55mｵｰﾑ/1.0V	4Pin WLCSP 1*1
TPS22913	2A	1.4V--5.5V	60mｵｰﾑ/5V&3.3V,74mｵｰﾑ1.8V	4Pin DSBGA 0.95*0.95
SLG5NT1533	2.5A	0.95V--VDD-1.5V	20mｵｰﾑ/1V	8Pin STDFN 1.6*1
TPS22964C	3A	1V--5.5V	13 mｵｰﾑ/5V,14 mｵｰﾑ/3.3V,18 mｵｰﾑ/1.8V	6PIN DSBGA 1.5*1

				NA
				ECA NO / DATE
DESIGNED	LIUQINKAI 00365571	SH0WATTM		65674354
REVIEWED	LISI XXXXX			
		VER	PART_NUMBER	SHEET 75 OF 75
		A	03030001	HUAWEI TECH CO.,LTD.

71_LOAD SWITCH_2

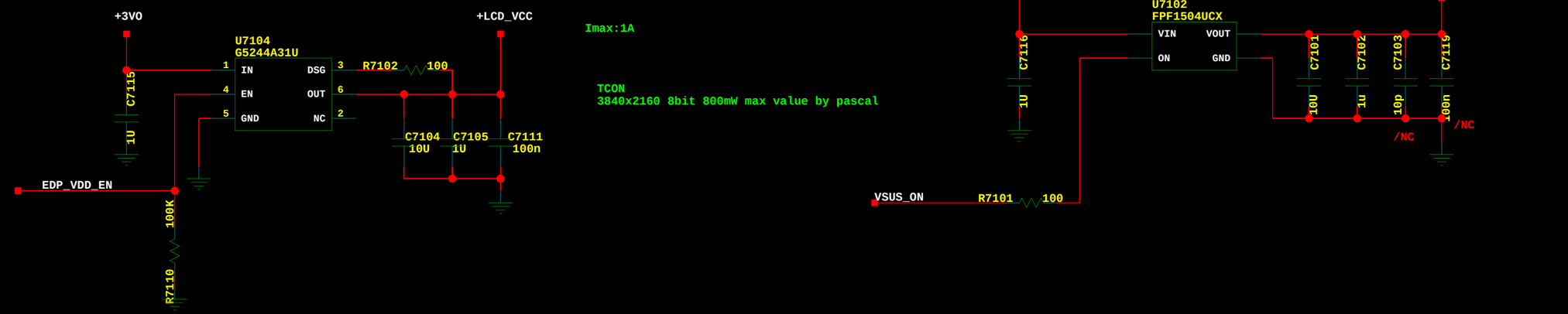

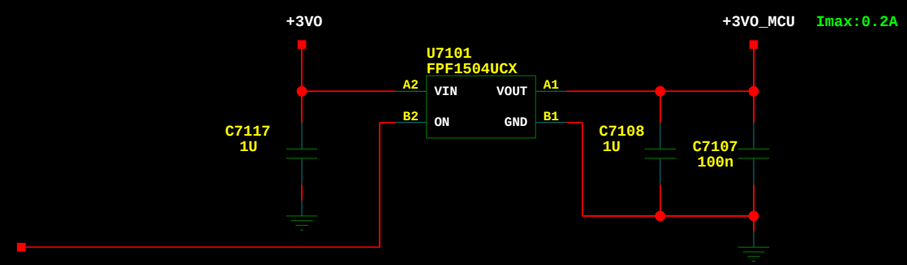

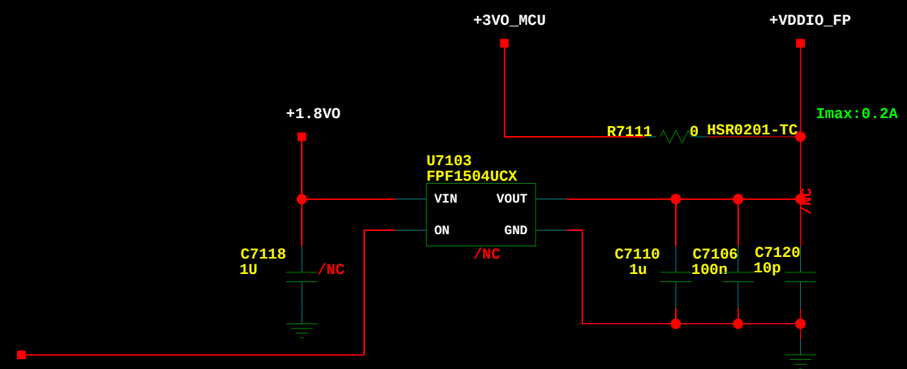

The type and specification of the components refer to the BOM

				NA	
				ECA NO	DATE
DESIGNED	LIUQINKAI 00365571	SH0WATTM		65674354	
REVIEWED	LISI XXXXX				
		VER	PART_NUMBER	SHEET 76 OF 76	
		A	03030001	HUAWEI TECH CO.,LTD.	

72_GPU VGACORE

TDC : 15.4A
Peak : 48.3A
OCP : 79A
Fsw : 350KHz

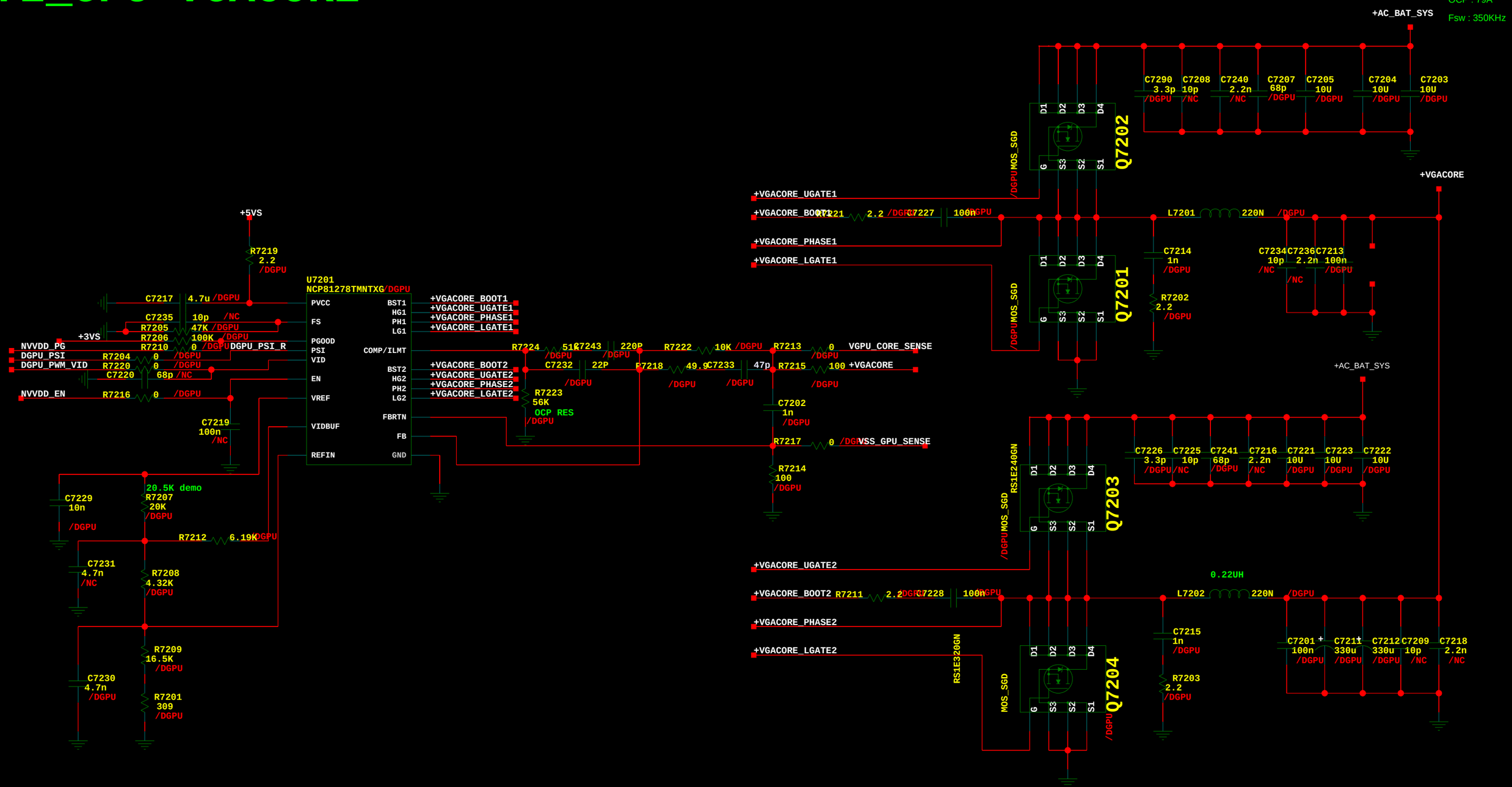

The type and specification of the components refer to the BOM

DESIGNED	LiuQinKai l00365571	MPC852T CBB	REV	QTY	ECA NO	DATE
REVIEWED	BISHUZHAN 20716				
		REV	PART NUMBER	DKBA0303****DL	SHEET 01 OF 07

HUAWEI TECH CO.,LTD.

73 GPU 1_05V/1_35V_GFX

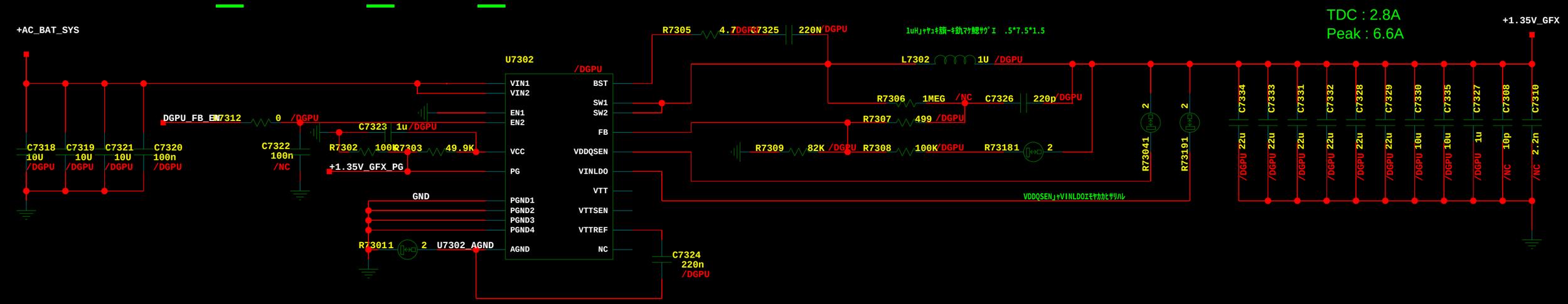

+1.0V_GFX

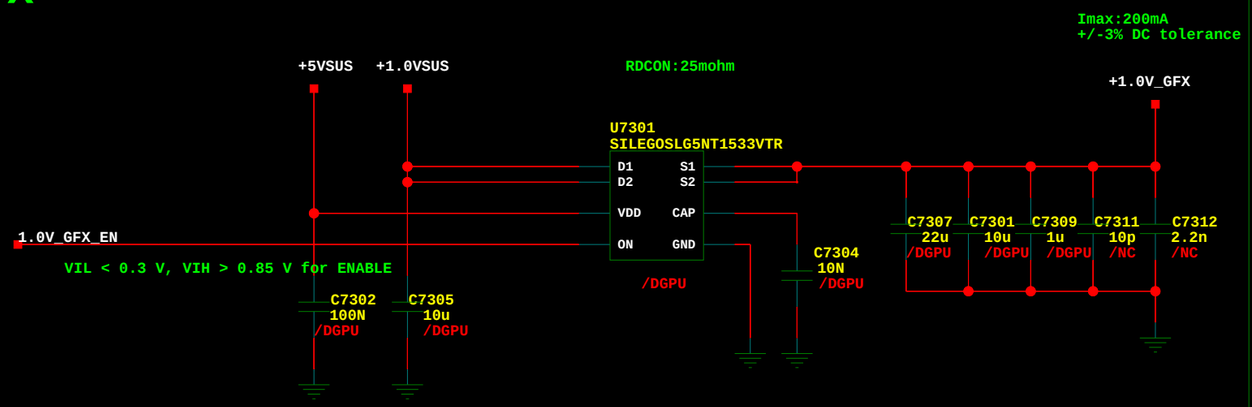

+1.8V_MAIN

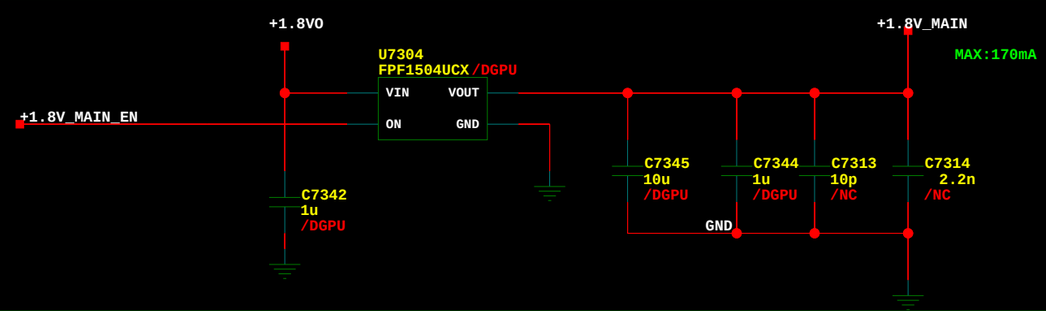

+1.8V_AON

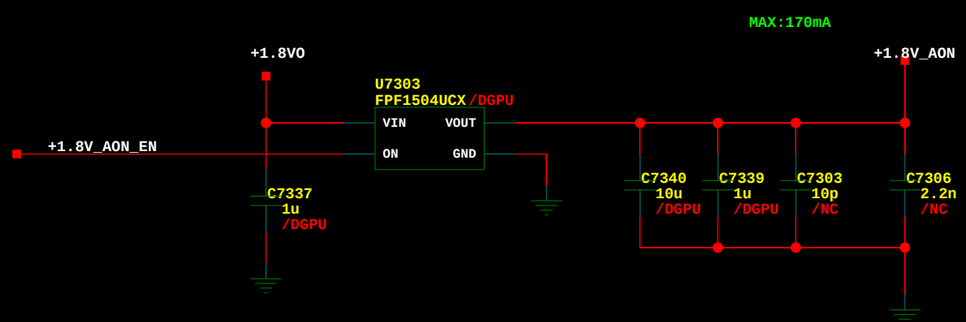

GPU Power On Sequence

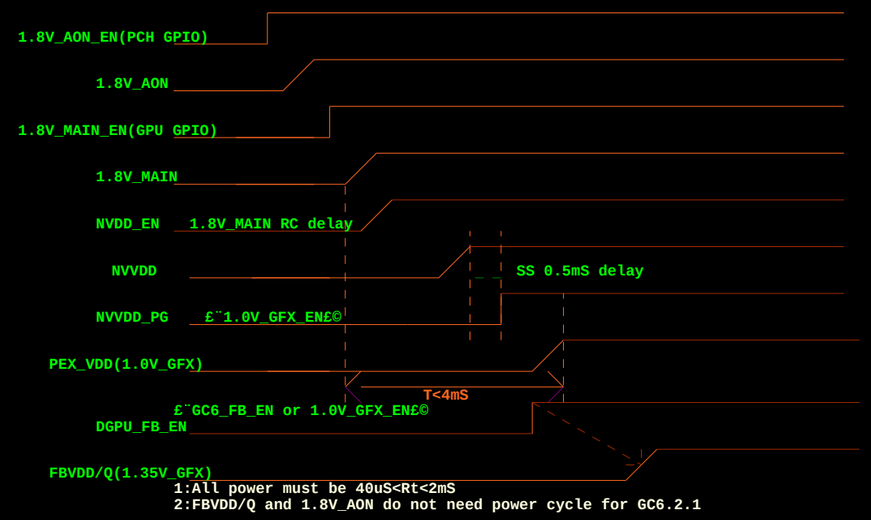

The type and specification of the components refer to the BOM

MAX:170mA		REV	QTY	ECA NO	DATE
DESIGNED	LiuQinKai l00365571	MPC852T CBB		DKBA0303****DL	
REVIEWED	BISHUZHAN 20716	REV	PART NUMBER	SHEET 01 OF 07	
				HUAWEI TECH CO.,LTD	

74.LCD_Backlight

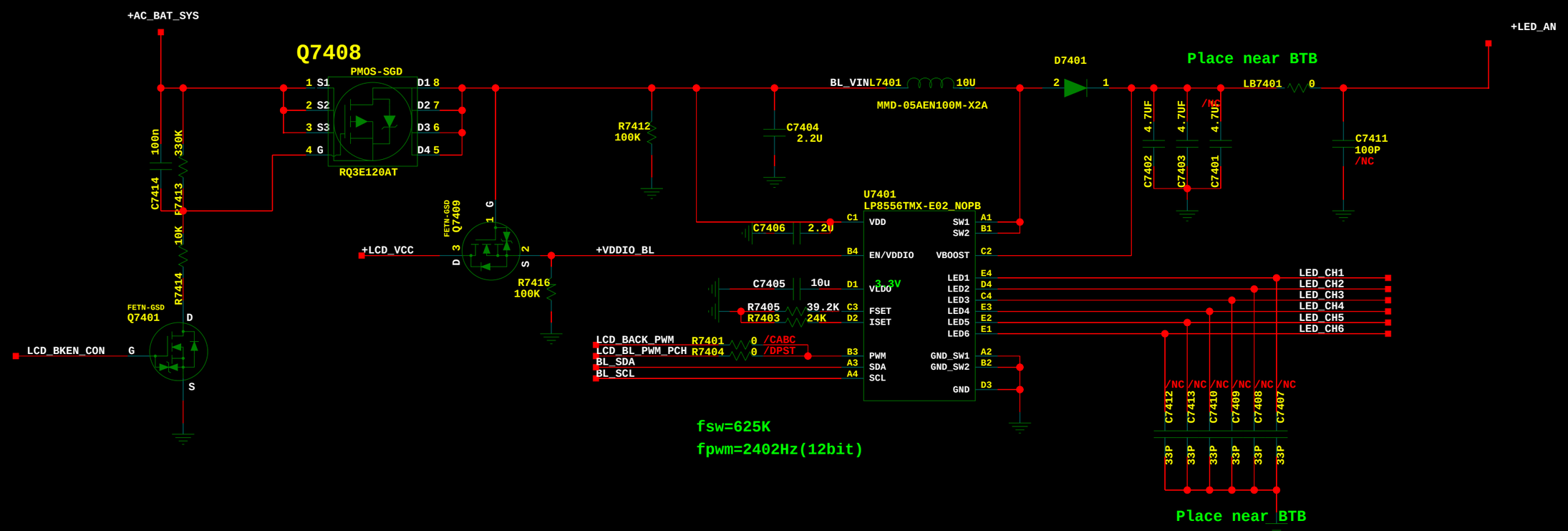

Level shift for I2C

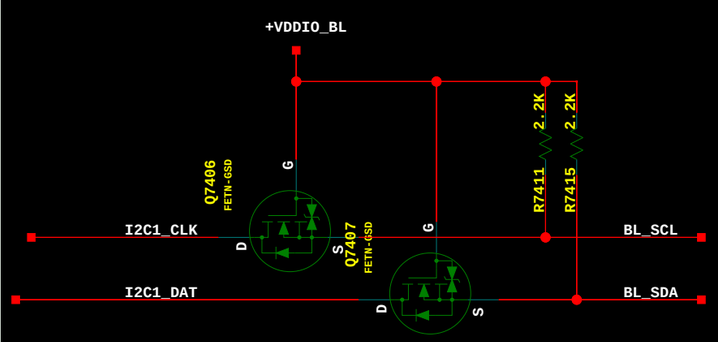

The type and specification of the components refer to the BOM

				NA	
				ECA NO	DATE
DESIGNED	LiuQinKai l00365571	SH0WATTM		65674354	
REVIEWED	LISI XXXXX				
		VER	PART_NUMBER	SHEET 49 OF 49	
		A	03030001	HUAWEI TECH CO.,LTD.	

75_TEST_POINT_SHIELDING

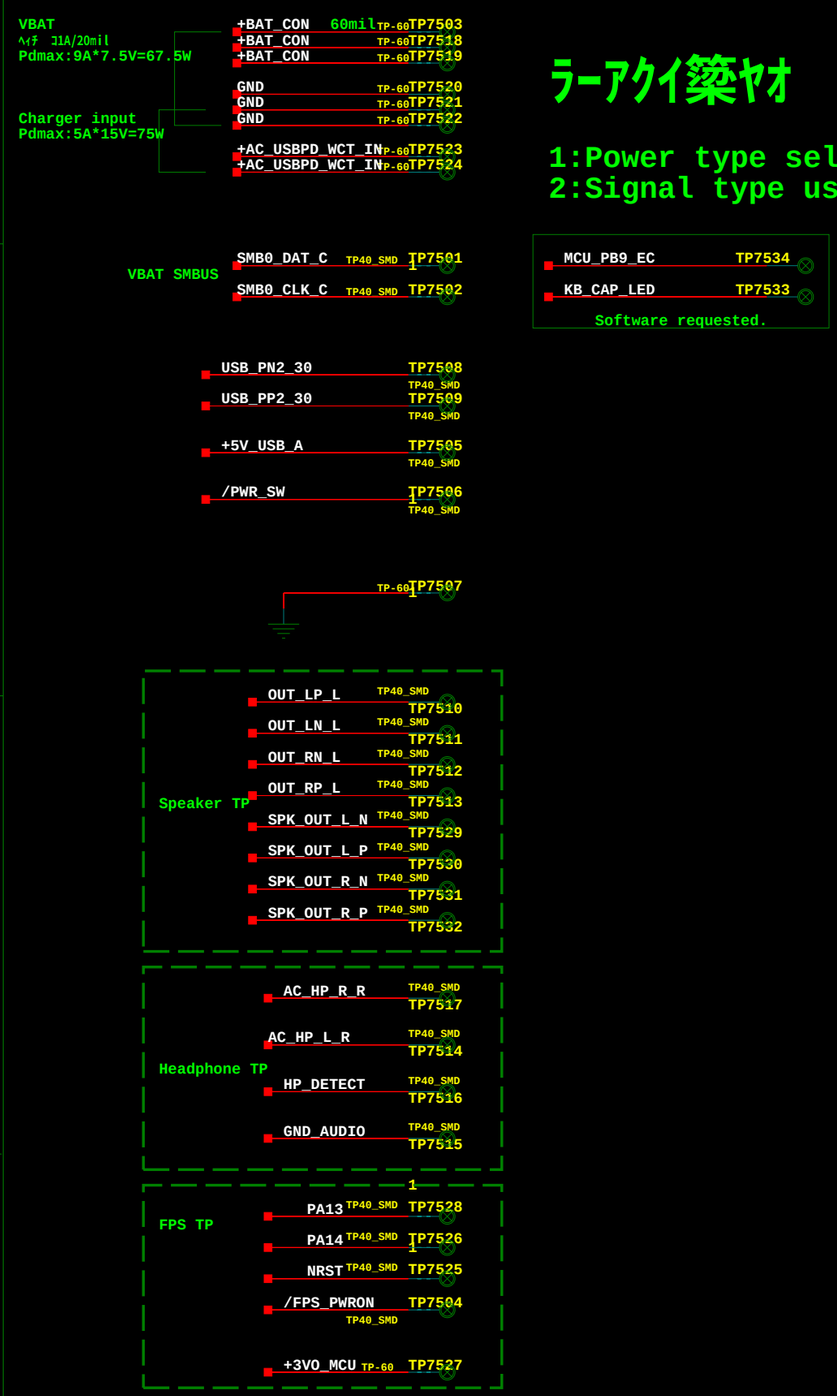

ﾗｰｱｸｲ築ﾔｵ

1:Power type select 60mil Test poiont
2:Signal type use 40mil test poiont

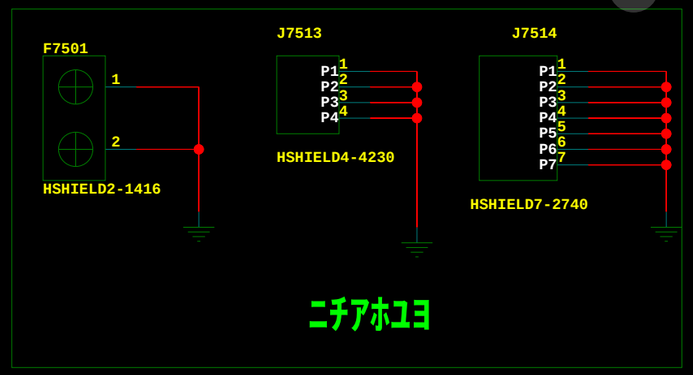

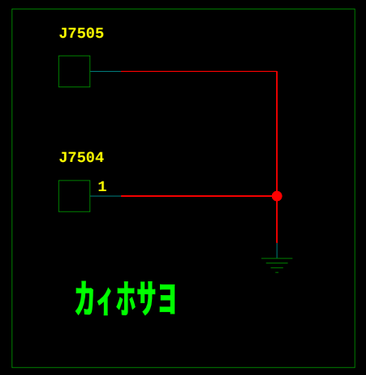

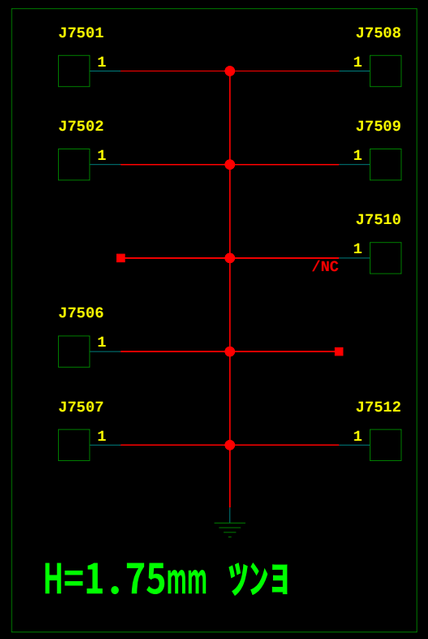

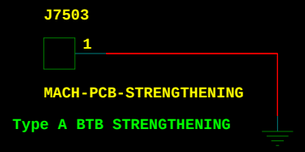

The type and specification of the components refer to the BOM

				NA	
				ECA NO	DATE
DESIGNED	LIWENSHENG87654565	Schematic1		65674354	
REVIEWED	LISI XXXXX			75_TEST_POINT_SHIELDING	
		VER	PART_NUMBER	SHEET	OF 75
		A	03030001	HUAWEI TECH CO.,LTD.	